INSTALLATION INSTRUCTIONS 24" (61.0 CM) GAS SINGLE AND DOUBLE BUILT-IN OVEN

Table of Contents

BUILT-IN OVEN SAFETY **1**
INSTALLATION REQUIREMENTS **3**
Tools and Parts 3
Location Requirements 3
Electrical Requirements 4
Gas Supply Requirements 5
INSTALLATION INSTRUCTIONS **6**
Prepare Built-In Oven 6
Make Gas Connection 6
Install Oven 7
Complete Installation 8
GAS CONVERSIONS **9**
LP Gas Conversion 9
Natural Gas Conversion 10

BUILT-IN OVEN SAFETY

Your safety and the safety of others are very important.

We have provided many important safety messages in this manual and on your appliance. Always read and obey all safety messages.

This is the safety alert symbol.

This symbol alerts you to potential hazards that can kill or hurt you and others.

All safety messages will follow the safety alert symbol and either the word “DANGER” or “WARNING.” These words mean:

⚠ DANGER — **You can be killed or seriously injured if you don't immediately follow instructions.**

⚠ WARNING — **You can be killed or seriously injured if you don't follow instructions.**

All safety messages will tell you what the potential hazard is, tell you how to reduce the chance of injury, and tell you what can happen if the instructions are not followed.

IMPORTANT:
Installer: Leave installation instructions with the homeowner.
Homeowner: Keep installation instructions for future reference.

W10526072B

WARNING: If the information in this manual is not followed exactly, a fire or explosion may result causing property damage, personal injury or death.

– Do not store or use gasoline or other flammable vapors and liquids in the vicinity of this or any other appliance.

– WHAT TO DO IF YOU SMELL GAS:

- **Do not try to light any appliance.**
- **Do not touch any electrical switch.**
- **Do not use any phone in your building.**
- **Immediately call your gas supplier from a neighbor's phone. Follow the gas supplier's instructions.**
- **If you cannot reach your gas supplier, call the fire department.**

– Installation and service must be performed by a qualified installer, service agency or the gas supplier.

WARNING: Gas leaks cannot always be detected by smell.

Gas suppliers recommend that you use a gas detector approved by UL or CSA.

For more information, contact your gas supplier.

If a gas leak is detected, follow the “What to do if you smell gas” instructions.

IMPORTANT: Do not install a ventilation system that blows air downward toward this gas cooking appliance. This type of ventilation system may cause ignition and combustion problems with this gas cooking appliance resulting in personal injury or unintended operation.

In the State of Massachusetts, the following installation instructions apply:

- Installations and repairs must be performed by a qualified or licensed contractor, plumber, or gasfitter qualified or licensed by the State of Massachusetts.
- If using a ball valve, it shall be a T-handle type.
- A flexible gas connector, when used, must not exceed 3 feet.

INSTALLATION REQUIREMENTS

Tools and Parts

Gather the required tools and parts before starting installation. Read and follow the instructions provided with any tools listed here.

Tools needed

- Tape measure
- Phillips screwdriver
- Flat-blade screwdriver
- ⅛" Flat-blade screwdriver
- Level
- Hand or electric drill
- Wrench or pliers
- Pipe wrench
- 15⁄16" combination wrench
- ⅛" (3.2 mm) drill bit (for wood floors)
- Marker or pencil
- Pipe-joint compound resistant to LP gas
- 3⁄16" (4.8 mm) carbide-tipped masonry drill bit (for concrete/ceramic floors)
- Noncorrosive leak-detection solution

For LP/Natural Gas Conversions

- ½" combination wrench
- 7 mm nut driver
- Masking tape

Parts needed

Check local codes and consult gas supplier. Check existing gas supply and electrical supply. See “Electrical Requirements” and “Gas Supply Requirements” sections.

Location Requirements

IMPORTANT: Observe all governing codes and ordinances. Do not obstruct flow of combustion and ventilation air.

- It is the installer’s responsibility to comply with installation clearances specified on the model/serial rating plate. The model/serial rating plate is located at bottom front face surface on the right-hand side of the oven frame.
- The oven should be located for convenient use in the kitchen.
- Recessed installation area must provide complete enclosure around the recessed portion of the oven.
- All openings in the wall or floor where oven is to be installed must be sealed.
- Cabinet opening dimensions that are shown must be used. Given dimensions provide minimum clearance with oven.
- Grounded electrical supply is required. See “Electrical Requirements” section.
- Proper gas supply connection must be available. See “Gas Supply Requirements” section.

IMPORTANT: To avoid damage to your cabinets, check with your builder or cabinet supplier to make sure that the materials used will not discolor, delaminate or sustain other damage. This oven has been designed in accordance with the requirements of UL and CSA International and complies with the maximum allowable wood cabinet temperatures of 194°F (90°C).

Product Dimensions - Single Oven

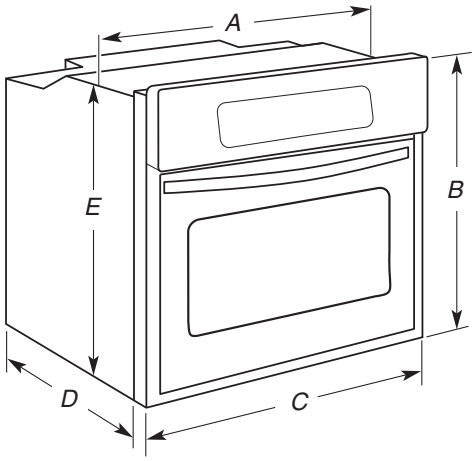

A. 22¼" (56.8 cm) max. recessed width
B. 39¼" (99.7 cm) max. overall height
C. 23⅞" (60.6 cm) overall width
D. 22⅝" (57.5 cm) max. recessed depth
E. 37¾" (95.9 cm) recessed height

Cabinet Dimensions - Single Oven

Single Oven Installed in Cabinet

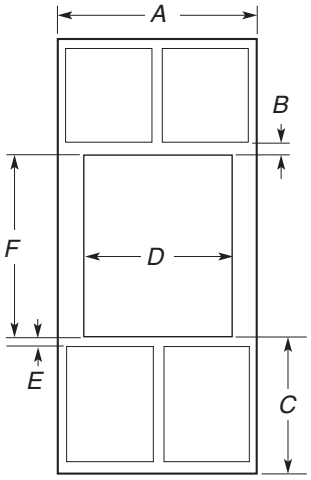

A. 24" (61 cm) min. cabinet width
B. 1½" (3.8 cm) top of cutout to bottom of upper cabinet door
C. 14" (35.6 cm) min. bottom of cutout to floor
D. 22⅜" (56.8 cm) cutout width
E. 1½" (3.8 cm) min. bottom of cutout to top of cabinet door
F. 38" (96.5 cm) cutout height

NOTE: For gas supply pipe, provide a 3" x 3" (7.6 cm x 7.6 cm) opening in the back wall of the cabinet centered 7" (17.8 cm) from the left rear corner and 3" above the bottom of the cabinet cutout. Install a 120 volt electrical outlet in the back wall of the cabinet centered 6" (15.2 cm) from the right rear corner and 4" (10.2 cm) below the top of the cabinet cutout.

Product Dimensions - Double Oven

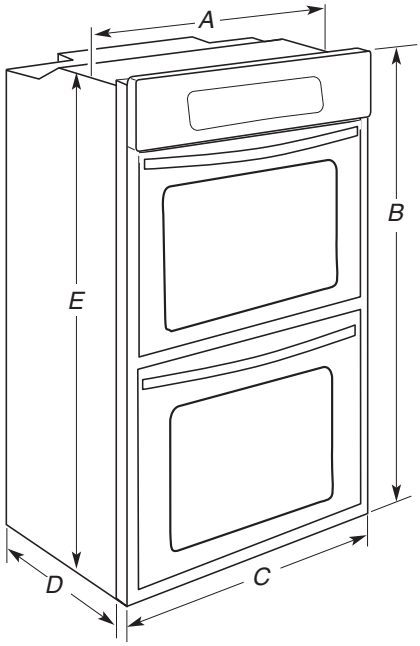

A. 22¼" (56.8 cm) max. recessed width
B. 46⁵⁄₁₆" (117.6 cm) max. overall height
C. 23⅞" (60.6 cm) overall width
D. 22⅝" (57.5 cm) max. recessed depth
E. 44¾" (113.4 cm) recessed height

Cabinet Dimensions - Double Oven

Double Oven Installed in Cabinet

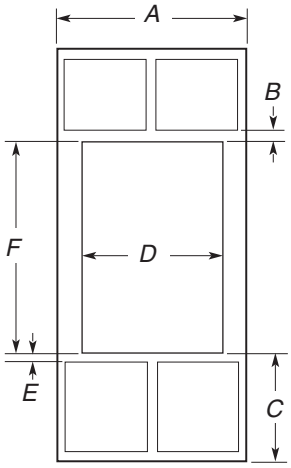

A. 24" (61 cm) min. cabinet width
B. 1½" (3.8 cm) top of cutout to bottom of upper cabinet door
C. 14" (35.6 cm) min. bottom of cutout to floor
D. 22⅜" (56.8 cm) cutout width
E. 1½" (3.8 cm) min. bottom of cutout to top of cabinet door
F. 45⅜" (115.3 cm) cutout height

NOTE: For gas supply pipe, provide a 3" x 3" (7.6 cm x 7.6 cm) opening in the back wall of the cabinet centered 7" (17.8 cm) from the left rear corner and 3" (7.6 cm) above the bottom of the cabinet cutout. Install a 120 volt electrical outlet in the back wall of the cabinet centered 6" (15.2 cm) from the right rear corner and 4" (10.2 cm) below the top of the cabinet cutout.

Cabinet Side View - Double or Single Oven

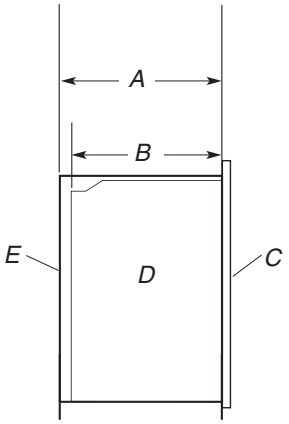

A. 24" (60.9 cm) min. cutout depth
B. 22⅝" (57.5 cm) recessed oven depth
C. Oven front
D. Recessed oven
E. Cabinet

Electrical Requirements

⚠WARNING

Electrical Shock Hazard

Plug into a grounded 3 prong outlet.

Do not remove ground prong.

Do not use an adapter.

Do not use an extension cord.

Failure to follow these instructions can result in death, fire, or electrical shock.

IMPORTANT: The oven must be electrically grounded in accordance with local codes and ordinances, or in the absence of local codes, with the National Electrical Code, ANSI/NFPA 70 or Canadian Electrical Code, CSA C22.1.

If codes permit and a separate ground wire is used, it is recommended that a qualified electrical installer determine that the ground path is adequate.

A copy of the above code standards can be obtained from:

National Fire Protection Association
1 Batterymarch Park
Quincy, MA 02169-7471

CSA International
8501 East Pleasant Valley Road
Cleveland, OH 44131-5575

- A 120 volt, 60 Hz., AC only, 15-amp fused, electrical circuit is required. A time-delay fuse or circuit breaker is also recommended. It is recommended that a separate circuit serving only this oven be provided.
- Electronic ignition systems operate within wide voltage limits, but proper grounding and polarity are necessary. Check that the outlet provides 120-volt power and is correctly grounded.
- The wiring diagram is located in the upper control compartment in a clear plastic bag.

Gas Supply Requirements

⚠WARNING

Explosion Hazard

Use a new CSA International approved gas supply line.

Install a shut-off valve.

Securely tighten all gas connections.

If connected to LP, have a qualified person make sure gas pressure does not exceed 14" (36 cm) water column.

Examples of a qualified person include:

licensed heating personnel,
authorized gas company personnel, and
authorized service personnel.

Failure to do so can result in death, explosion, or fire.

Observe all governing codes and ordinances.

IMPORTANT: This installation must conform with all local codes and ordinances. In the absence of local codes, installation must conform with American National Standard, National Fuel Gas Code ANSI Z223.1 - latest edition or CAN/CGA B149 - latest edition.

IMPORTANT: Leak testing of the oven must be conducted according to the manufacturer's instructions.

Type of Gas

Natural gas:

- This oven is factory set for use with Natural gas. See "Gas Conversions" section. The model/serial rating plate located behind the broiler drawer on the right-hand side oven front frame has information on the types of gas that can be used. If the types of gas listed do not include the type of gas available, check with the local gas supplier.

LP gas conversion:

Conversion must be done by a qualified service technician.

No attempt shall be made to convert the appliance from the gas specified on the model/serial rating plate for use with a different gas without consulting the serving gas supplier. See "Gas Conversions" section.

Gas Supply Line

- Provide a gas supply line of ¾" (1.9 cm) rigid pipe to the oven location. A smaller size pipe on longer runs may result in insufficient gas supply. Pipe-joint compounds that resist the action of LP gas must be used. Do not use TEFLON®† tape. With LP gas, piping or tubing size can be ½" (1.3 cm) minimum. Usually, LP gas suppliers determine the size and materials used in the system.

  Flexible metal appliance connector:

  - If local codes permit, a new CSA design-certified, 4 to 5 ft (122 to 152.4 cm) long, ½" (1.3 cm) or ¾" (1.9 cm) I.D., flexible metal appliance connector may be used for connecting oven to the gas supply line.

  - A ½" (1.3 cm) male pipe thread is needed for connection to the female pipe threads of the inlet to the appliance pressure regulator.
  - Do not kink or damage the flexible metal tubing when moving the oven.

  Rigid pipe connection:

  The rigid pipe connection requires a combination of pipe fittings to obtain an in-line connection to the oven. The rigid pipe must be level with the oven connection. All strains must be removed from the supply and fuel lines so oven will be level and in line.

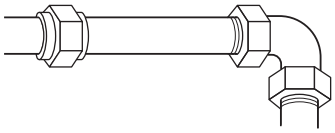

- Must include a shutoff valve:
  The supply line must be equipped with a manual shutoff valve. This valve should be located in the same room but external to the oven opening, such as an adjacent cabinet. It should be in a location that allows ease of opening and closing. Do not block access to shutoff valve. The valve is for turning on or shutting off gas to the oven.

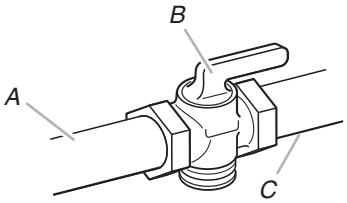

A. Gas supply line
B. Shutoff valve "open" position
C. To range

†®TEFLON is a registered trademark of E.I. Du Pont De Nemours and Company.

Gas Pressure Regulator

The gas pressure regulator supplied with this oven must be used. The inlet pressure to the regulator should be as follows for proper operation:

Natural gas:

Minimum pressure: 5" WCP

Maximum pressure: 14" WCP

LP gas:

Minimum pressure: 11" WCP

Maximum pressure: 14" WCP

Contact local gas supplier if you are not sure about the inlet pressure.

Burner Input Requirements

Input ratings shown on the model/serial rating plate are for elevations up to 2,000 ft (609.6 m).

For elevations above 2,000 ft (609.6 m), the burner should be reduced 4% for each 1,000 ft (304.8 m) above sea level (not applicable for Canada).

Gas Supply Pressure Testing

Gas supply pressure for testing regulator must be at least 1" water column pressure above the manifold pressure shown on the model/serial rating plate.

Line pressure testing above ½ psi gauge (14" WCP)

The oven and its individual shutoff valve must be disconnected from the gas supply piping system during any pressure testing of that system at test pressures in excess of ½ psi (3.5 kPa).

Line pressure testing at ½ psi gauge (14" WCP) or lower

The oven must be isolated from the gas supply piping system by closing its individual manual shutoff valve during any pressure testing of the gas supply piping system at test pressures equal to or less than ½ psi (3.5 kPa).

INSTALLATION INSTRUCTIONS

Prepare Built-In Oven

1. Decide on the final location for the oven. Locate existing wiring to avoid drilling into or severing wiring during installation.

⚠WARNING

Excessive Weight Hazard

Use two or more people to move and install oven.

Failure to do so can result in back or other injury.

2. To avoid floor damage, set the oven onto cardboard prior to installation. Do not use handle or any portion of the front frame or trim for lifting.
3. Remove the shipping materials and tape from the oven.
4. Remove the hardware package from inside the bag containing literature.
5. Remove and set aside racks and other parts from inside the oven.
6. Move oven and cardboard close to the oven's final location.

Remove Oven Door.

IMPORTANT: Use both hands to remove oven doors.

1. Open door to the broil stop position (about 4" to 6" [10.2 cm to 15.2 cm]).
2. Grasp sides of the door at the middle. Slowly lift door straight up.

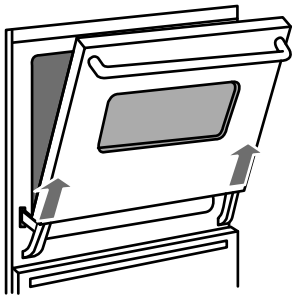

3. While lifting the door up, very slightly open the door by pulling it forward. Check that the latches swing down into the notches on the hinge arms.

Make Gas Connection

⚠WARNING

Explosion Hazard

Use a new CSA International approved gas supply line.

Install a shut-off valve.

Securely tighten all gas connections.

If connected to LP, have a qualified person make sure gas pressure does not exceed 14" (36 cm) water column.

Examples of a qualified person include:

licensed heating personnel,
authorized gas company personnel, and
authorized service personnel.

Failure to do so can result in death, explosion, or fire.

Typical flexible connection

1. Apply pipe-joint compound made for use with LP gas to the smaller thread ends of the flexible connector adapters (see B and G in the following illustration).
2. Attach one adapter to the gas pressure regulator and the other adapter to the gas shutoff valve. Tighten both adapters.

3. Use a 15⁄16" combination wrench and an adjustable wrench to attach the flexible connector to the adapters. Check that connector is not kinked.

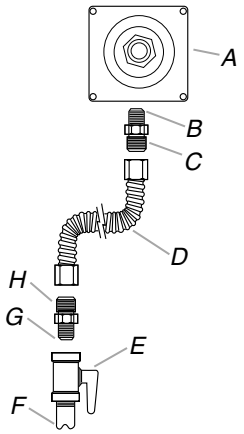

A. Gas pressure regulator
B. Use pipe-joint compound.
C. Adapter (must have ½" male pipe thread)
D. Flexible connector
E. Manual gas shutoff valve
F. ½" or ¾" gas pipe
G. Use pipe-joint compound.
H. Adapter

4. Gas supply pipe must be located within clearance area as shown in the "Cabinet Dimensions" illustration in "Location Requirements" section.

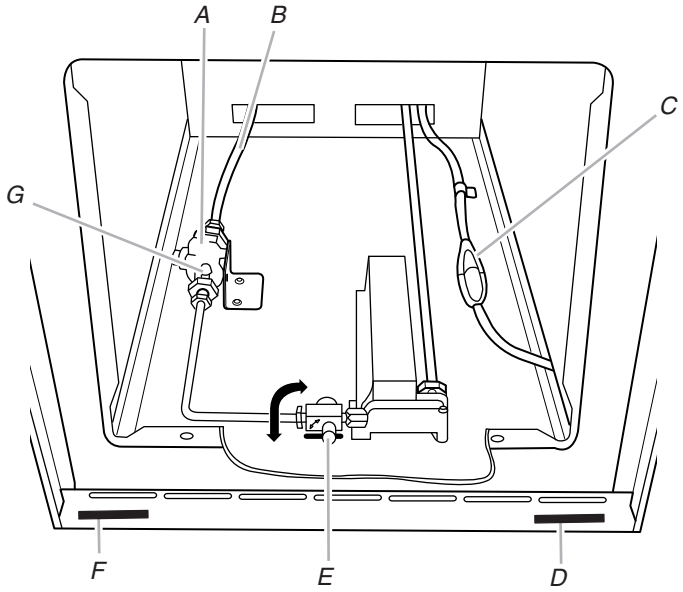

A. Gas pressure regulator
B. Gas supply line
C. Electrical disconnect
D. Serial plate
E. Manual oven valve
F. Burner rating plate
G. Manifold pressure tap

Complete connection

1. Open the manual shutoff valve in the gas supply line. The valve is open when the handle is parallel to the gas pipe.

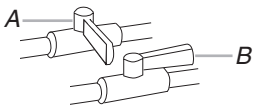

A. Closed valve
B. Open valve

2. Test all connections by brushing on an approved noncorrosive leak-detection solution. If bubbles appear, a leak is indicated. Correct any leak found.

⚠WARNING

Electrical Shock Hazard

Plug into a grounded 3 prong outlet.

Do not remove ground prong.

Do not use an adapter.

Do not use an extension cord.

Failure to follow these instructions can result in death, fire, or electrical shock.

3. Plug into a grounded 3 prong outlet.

Install Oven

⚠WARNING

Excessive Weight Hazard

Use two or more people to move and install oven.

Failure to do so can result in back or other injury.

1. Using 2 or more people, lift oven partially into cabinet cutout. Use the oven opening as an area to grip.

   NOTE: Push against seal area of oven front frame when pushing oven into cabinet. Do not push against outside edges.

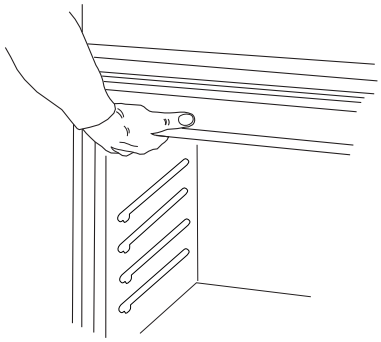

2. Push oven completely into cabinet and center oven into cabinet cutout.

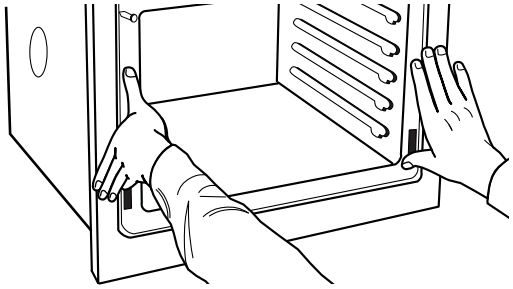

3. Securely fasten oven to cabinet using the 0.188 x 2.1" screws (4 for single oven, 6 for double oven) provided. Insert the screws through holes in decorative trim. To avoid cabinet damage, use the 0.140" diameter (number 28) drill bit to predrill the pilot holes before driving screws. Do not overtighten screws.

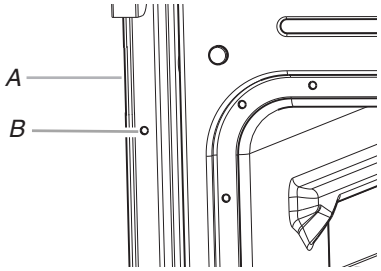

A. Decorative trim
B. Insert screw.

4. Replace oven racks.
5. Grasp sides of the door and align slots in door with the hinge arms.
6. Slightly pull the door open as you slide the door down onto the hinge arms. The sliding action of the door will disengage the latches on the hinge arms.
7. Gently push the door downward until the door rests evenly on the hinges.
8. Close door.
9. Repeat for lower oven door.
10. Reconnect power.
11. Display panel will light briefly, and “PF” should appear in the display.
12. If display panel does not light, please reference the “Assistance or Service” section of the Use and Care Guide or contact the dealer from whom you purchased your oven.

Complete Installation

1. Check that all parts are now installed. If there is an extra part, go back through the steps to see which step was skipped.
2. Check that you have all of your tools.
3. Dispose of/recycle all packaging materials.
4. For oven use and cleaning, read the Use and Care Guide.

Initial lighting and gas flame adjustments

This oven is equipped with an electric control system as well as an electric oven burner igniter. This control system requires no adjustment. When the oven control is turned on a glow bar igniter heats and ignites the gas.

Check Operation of Oven(s)

1. Turn power on. The time should flash in the display.
2. Check that the oven door(s) is closed
3. Turn on the oven(s) Broil function. See the Use and Care Guide for instructions.

   If oven(s) does not operate, check the following:

   - Household fuse is intact and tight; or circuit breaker has not tripped.
   - Electrical supply is connected.
   - See “Troubleshooting” section in the Use and Care Guide.
4. When oven has been on for 5 minutes, feel for heat.

   If you do not feel heat or if an “F” followed by a number appears in the display, turn off the oven and contact a qualified technician.
5. Press CANCEL.

Check Operation of Bake/Broil Burner

Press BAKE. “BAKE” and temperatures will show in the display. The igniter used to light the bake burner will glow. Once the igniter is hot the oven bake burner should light. Under certain conditions it may take up to 60 seconds for the bake burner to light.

If burners do not light properly:

- Press CANCEL to turn off the oven.
- Check that the oven is plugged in and circuit breaker has not tripped or the household fuse has not blown.
- Check that the gas shutoff valves are set to the “open” position.

Repeat start-up. If burner does not light, press CANCEL to turn off the oven and contact your dealer or authorized service company for assistance.

If you need Assistance or Service:

Please reference the “Assistance or Service” section of the Use and Care Guide or contact the dealer from whom you purchased your built-in oven.

GAS CONVERSIONS

Gas conversions from Natural gas to LP gas or from LP gas to Natural gas must be done by a qualified installer.

⚠WARNING

Explosion Hazard

Use a new CSA International approved gas supply line.

Install a shut-off valve.

Securely tighten all gas connections.

If connected to LP, have a qualified person make sure gas pressure does not exceed 14" (36 cm) water column.

Examples of a qualified person include:

licensed heating personnel,
authorized gas company personnel, and
authorized service personnel.

Failure to do so can result in death, explosion, or fire.

LP Gas Conversion

1. Turn manual shutoff valve to the closed position.
2. Unplug oven or disconnect power.

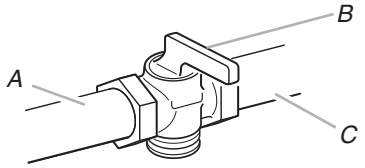

A. To oven
B. Shutoff valve (closed position)
C. Gas supply line

To Convert Gas Pressure Regulator

1. Locate gas pressure regulator in bottom compartment.

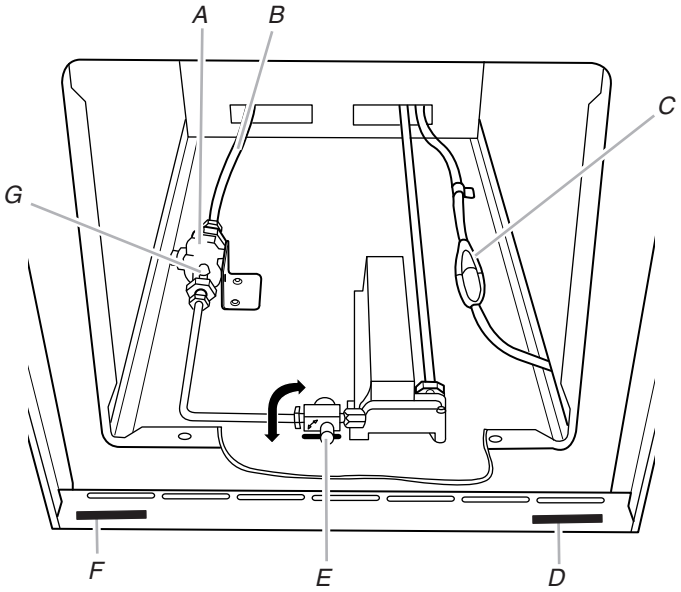

A. Gas pressure regulator
B. Gas supply line
C. Electrical disconnect
D. Serial plate
E. Manual oven valve
F. Burner rating plate
G. Manifold pressure tap

IMPORTANT: Do not remove the gas pressure regulator.

2. Unscrew the hex-shaped regulator cap from the regulator and remove the regulator pin.

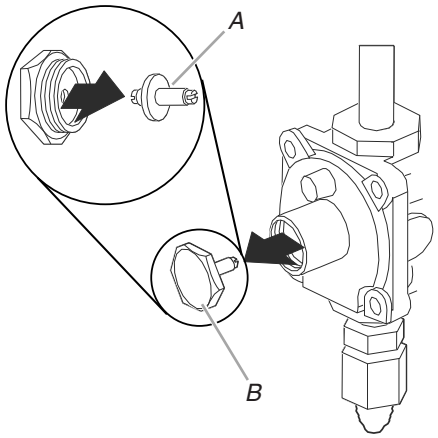

A. Regulator pin
B. Regulator cap

3. Flip the regulator pin over and snap pin firmly into place.

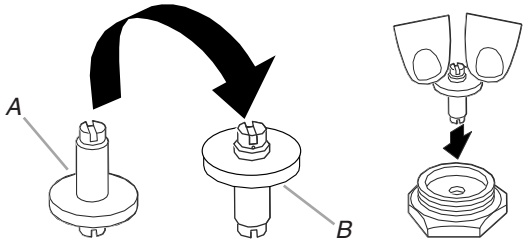

A. Natural gas position
B. LP gas position

4. Screw the hex-shaped regulator cap securely back into place. Do not overtighten.

To Convert Bake/Broiler Burner

1. Remove racks from inside the broiler cavity.
2. Screw the burner orifice hood down tight against the pins. Do not overtighten.

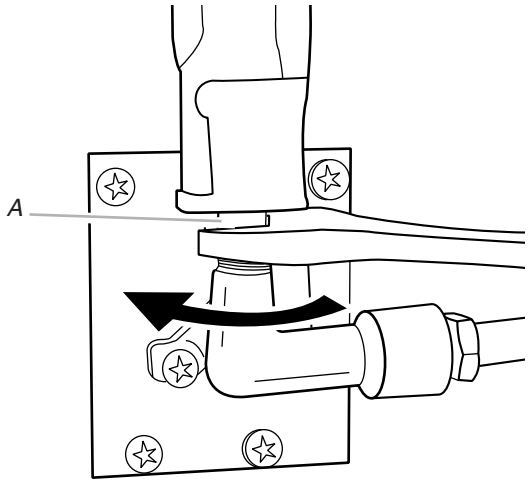

A. Burner orifice hood

NOTE: On units using Eaton Oven Safety Valve, screw the valve orifice hood down tight against the valve body. It is important that the hood be turned down as far as it can go to ensure complete conversion has occurred.

3. Adjust burner air shutter to the widest opening that will not cause the flame to lift or blow off the burner when cold.

Natural Gas Conversion

1. Turn manual shutoff valve to the closed position.
2. Unplug oven or disconnect power.

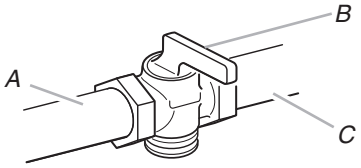

A. To oven
B. Shutoff valve (closed position)
C. Gas supply line

To Convert Gas Pressure Regulator

1. Locate gas pressure regulator in bottom compartment.

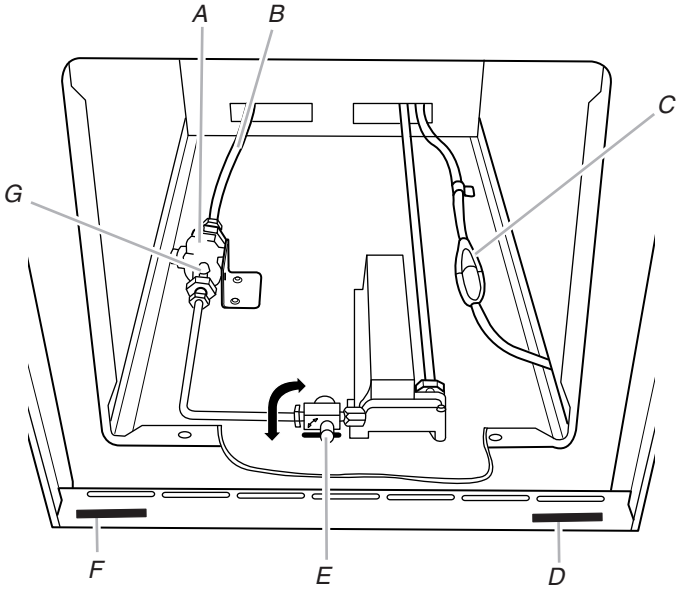

A. Gas pressure regulator
B. Gas supply line
C. Electrical disconnect
D. Serial plate
E. Manual oven valve
F. Burner rating plate
G. Manifold pressure tap

IMPORTANT: Do not remove the gas pressure regulator.

2. Unscrew the hex-shaped regulator cap from the regulator and remove the regulator pin.

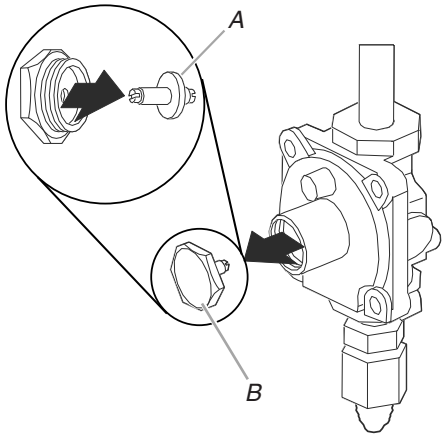

A. Regulator pin
B. Regulator cap

3. Flip the regulator pin over and snap pin firmly into place.

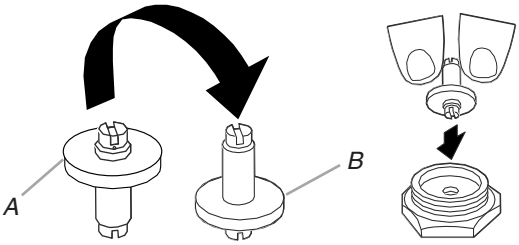

A. LP gas position
B. Natural gas position

4. Screw the hex-shaped regulator cap securely back into place. Do not overtighten.

To Convert Oven Bake/Broil Burner

1. Remove racks from inside the broiler cavity.
2. Screw the burner orifice hood away from the pins. There will be approximately 1½ to 2 turns.

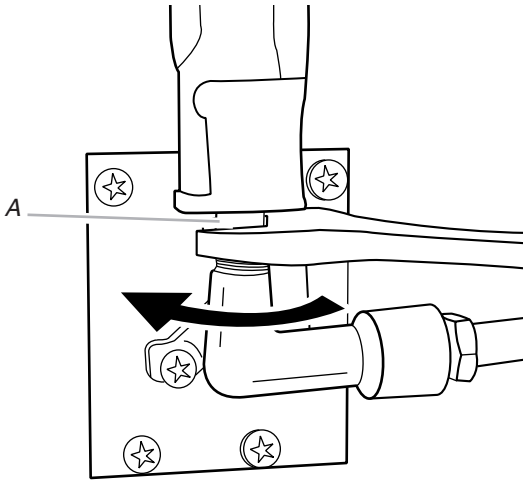

A. Burner orifice hood

NOTE: On units using Eaton Oven Safety Valve, screw the burner orifice hood away from the pin. There will be approximately 1½ to 2 turns.

3. Adjust burner air shutter to the widest opening that will not cause the flame to lift or blow off the burner when cold.

© 2015. All rights reserved.