FOR SERVICE TECHNICIAN'S USE ONLY

Tech Sheet **Do not discard**

⚠ DANGER

Electrical Shock Hazard

Only authorized technicians should perform diagnostic voltage measurements.

After performing voltage measurements, disconnect power before servicing.

Failure to follow these instructions can result in death or electrical shock.

⚠ WARNING

Electrical Shock Hazard

Disconnect power before servicing.

Replace all parts and panels before operating.

Failure to do so can result in death or electrical shock.

Voltage Measurement Safety Information

When performing live voltage measurements, you must do the following:

- **Verify the controls are in the off position so that the appliance does not start when energized.**
- **Allow enough space to perform the voltage measurements without obstructions.**
- **Keep other people a safe distance away from the appliance to prevent potential injury.**
- **Always use the proper testing equipment.**
- **After voltage measurements, always disconnect power before servicing.**

PRECAUTIONS TO BE OBSERVED BEFORE AND DURING SERVICING TO AVOID POSSIBLE EXPOSURE TO EXCESSIVE MICROWAVE ENERGY

a. Do not operate or allow the oven to be operated with the door open.

b. Make the following safety checks on all ovens to be serviced before activating the magnetron or other microwave source, and make repairs as necessary:

1. Interlock Operation
2. Proper Door Closing
3. Seal and Sealing Surfaces (Arcing, Wear and Other Damage)
4. Damage to or Loosening of Hinges and Latches
5. Evidence of Dropping or Abuse

c. Before turning on microwave power for any service test or inspection within the microwave generating compartments, check the magnetron, wave guide or transmission line, and cavity for proper alignment, integrity and connections.

d. Any defective or misadjusted components in the interlock, monitor, door seal, and microwave generation and transmission systems shall be repaired, replaced, or adjusted by procedures described in this manual before the oven is released to the owner.

e. A microwave leakage check to verify compliance with the Federal Performance Standard should be performed on each oven prior to release to the owner.

f. Do not attempt to operate the oven if the door glass is broken.

FOR SERVICE TECHNICIAN'S USE ONLY

FAILURE CODE INDICATIONS

NOTE: Many of the problems listed in the chart below may be solved by power cycling: Unplug microwave oven or disconnect power. After 1 minute, plug in microwave oven or reconnect power.

Display	Likely Failure Condition	Recommended Repair Procedure
"Enter clock"	Power failure	After a power failure, "Enter clock" will be flashing. Press CANCEL to end this indication. The colon will appear when in Standby mode.
F1E4	Microwave ACU failure	1. Unplug microwave oven or disconnect power. 2. Replace ACU. 3. Replace all parts and panels before operating. 4. Plug in microwave oven or reconnect power.
F2E1	Stuck key failure	1. Unplug microwave oven or disconnect power. 2. Replace keypad. 3. Replace all parts and panels before operating. 4. Plug in microwave oven or reconnect power. 5. If problem persists, refer to "ACU Pin Voltage Matrix."
F4E4	Humidity sensor error	1. Enter the Diagnostics mode (press CANCEL - CANCEL - START), and then press COOK to display the humidity sensor reading. If display does not show "8891," continue to Step 2. 2. Unplug microwave oven or disconnect power. 3. Connect a new humidity sensor to the ACU P6 connector. 4. Replace all parts and panels before operating. 5. Plug in microwave oven or reconnect power. 6. Enter the Diagnostics mode (press CANCEL - CANCEL - START), and then press COOK to see if failure code reappears. **NOTE:** There may be a delay (approximately 1 minute, 20 seconds) before the F4E4 failure code is displayed. 7. If the F4E4 failure code reappears, unplug microwave oven or disconnect power. 8. Replace ACU. 9. Replace all parts and panels before operating. 10. Plug in microwave oven or reconnect power.
F8E5	Exhaust air template detector failure	1. Press CANCEL - CANCEL - START, verify failure code, and then press CLOCK/OPTIONS to display the exhaust air temperature sensor reading. Verify the sensor temperature reading is at room temperature (typically 50°F to 90°F [10°C to 32°C]) and verify failure code. If failure code matches complaint, continue to Step 2. 2. Unplug microwave oven or disconnect power. 3. Disconnect sensor from ACU. 4. Disconnect sensor from ACU. Measure sensor resistance between connector pins and confirm reading is between 9.5 kW and 10.5 kW at room temperature. If measurement is not correct, or if a short or open circuit is found, replace sensor. 5. Replace all parts and panels before operating. 6. Plug in microwave oven or reconnect power. 7. Enter the Diagnostics mode (press CANCEL -CANCEL - START), and then press OPTIONS/CLOCK to display the cavity temperature sensor reading. Verify the sensor temperature reading. If it is still not correct, replace ACU. 8. If failure does not reappear, stop.

PRIMARY, SECONDARY, AND MONITOR INTERLOCK SWITCH CHECKOUT PROCEDURES

IMPORTANT: Before checking the interlock switches, unplug microwave oven or disconnect power. Be sure to disconnect all of the wires at the switch being tested before making any continuity readings.

NOTE: The Primary Interlock Switch, Monitor Interlock Switch, Secondary Interlock Switch and Door Interlock Switch are mounted in the door lock switch cradle. All the Interlock Switches can be identified by the wire colors that are connected to the terminals of the switches. See the chart below for wire color designation.

Switch	Check By	Door Open	Door Closed
Primary Interlock	1. Unplug microwave oven or disconnect power. 2. Disconnect the wires at the Primary Interlock Switch. 3. Check from the common terminal (black/brown wires) to the normally open terminal (black/white wires). 4. Reconnect wires to switch.	-	+
Monitor Interlock	1. Unplug microwave oven or disconnect power. 2. Disconnect the wires at the Monitor Interlock Switch. 3. Check from the common terminal (white/red wires) to the normally closed terminal (blue/white wires). 4. Reconnect wires to switch.	+	-
Secondary Interlock	1. Unplug microwave oven or disconnect power. 2. Disconnect the wires at the Secondary Interlock Switch. 3. Check from the common terminal (white wire) to the normally open terminal (blue wires). 4. Reconnect wires to switch.	-	+
Door Interlock	1. Unplug microwave oven or disconnect power. 2. Disconnect the wires at the Door Interlock Switch. 3. Check from the common terminal (blue wire) to the normally closed terminal (orange wire). 4. Reconnect wires to switch.	+	-

(+) Continuity (-) No Continuity

FOR SERVICE TECHNICIAN'S USE ONLY

NOTE: These diagrams are not intended to show a complete circuit; they represent the position of switches during "DOOR OPEN" or "DOOR CLOSED" (continuity checks only).

NOTE: Interlock, Monitor switches and Door interlock switch cannot be adjusted and all these switches should be replaced if any of them is found to be defective. After replacing interlock/monitor switches, reconnect wires to switch and check for continuity. Safety interlocks and monitor switches will actuate within 2 mm.

Door Closed

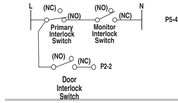

Door Open

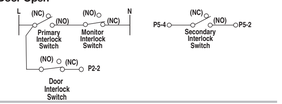

NOT HEATING TROUBLESHOOTING INSTRUCTION

IMPORTANT: High-voltage is present at the magnetron and high-voltage capacitor terminals. Avoid direct contact when power is connected to these components to avoid serious injury or possible death. Always be sure that the high-voltage capacitor is discharged before accessing any of these components.

For a no-heat condition, refer to the following step-by-step instructions:

1. Unplug microwave oven or disconnect power.
2. Discharge the high-voltage capacitor.
3. Disconnect the high-voltage transformer primary windings.
4. Attach the voltmeter leads to the high-voltage transformer primary input wires.
5. Plug in microwave oven or reconnect power.
6. Close door and program the microwave oven to operate for 30 seconds.
7. Press START.
8. Check the input voltage at the high-voltage transformer primary input wires. If the voltage is not close to the rating voltage 120+/-15 VAC, unplug microwave oven or disconnect power. Check the circuitry as follows:
   - Measure resistance of the fuse, micro-switches, and thermostats. Replace any failed components (refer to the wiring diagram).
   - Check for loose terminals, (Refer to the wiring diagram.) Check all of the terminals on the main route from the power supply to the high-voltage transformer.
   - Check for loose or failed connectors on the ACU (P1, P2, P4). If these check out OK, plug in microwave oven or reconnect power.
   - Check for ACU failure. Refer to the "ACU Pin Voltage Matrix" section.
9. If the input voltage at the high-voltage transformer primary input wires is close to the rating voltage 120 +/-15 VAC, unplug microwave oven or disconnect power.
10. Check the power supply components. Refer to the "Component Tests" section.
    - High-voltage transformer
    - High-voltage capacitor
    - High-voltage diode
11. If the power supply components check out OK, check the connection between the magnetron and the high-voltage transformer.
12. If all of the components check out OK, replace the magnetron.
13. Reconnect the high-voltage transformer primary windings.

ACU PIN VOLTAGE MATRIX

Check for proper voltage by completing the following steps:

1. Unplug microwave oven or disconnect power.
2. Connect voltage measurement equipment to the terminals listed below. (P1-3, P2-1 are neutral.)
3. Plug in microwave oven or reconnect power, and confirm voltage reading.
4. Unplug microwave oven or disconnect power.

NOTE: For 50 V and over, the tolerance is +/-15 V. For 0 V, the tolerance is +/-3 V.

Abbreviations

HL – Hood Light N – Neutral CL – Cavity Light HF – Hood Fan L – Line Voltage TT – Turntable Motor NFS – Neutral for Switch

NOTE: When checking voltage readings on ACU, connect the grounding test lead of voltmeter to ACU neutral wire. Use the positive test lead to probe connectors designated below.

FOR SERVICE TECHNICIAN'S USE ONLY

Pin Name	Wire Color	MW Oven Plugged In—Sitting Idle—ACV Readings: Power On, Door Closed	Power On, Door Open	Hood Fan Motor—High	Hood Fan Motor—High, Door Open	Hood Fan Motor—Med-High	Hood Fan Motor—Med-High, Door Open	Hood Fan Motor—Low	Hood Fan Motor—Low, Door Open	Hood Light—High	Hood Light—High, Door Open	Hood Light—Low	Hood Light—Low, Door Open	MW Oven Running ACV Readings: MW Oven Start
P1-1 (L)	Brown	120	120	120	120	120	120	120	120	120	120	120	120	120
P1-3 (N)	Blue	0	0	0	0	0	0	0	0	0	0	0	0	0
P2-3 (NFS)	Blue	0	120	0	120	0	120	0	120	0	120	0	120	3.6
P2-2 (Door)	Orange	0	120	0	120	0	120	0	120	0	120	0	120	49
P2-1 (N)	White	0	0	0	0	0	0	0	0	0	0	0	0	0
P4-4 (HF-Lo)	White	0	120	0	120	0	120	0	120	0	120	0	120	120
P4-5 (TTM)	Red	0	120	0	120	0	120	0	120	0	120	0	120	120
P4-1 (HL)	Yellow	0	0	0	0	0	0	0	0	120	120	67	67	2.4
P4-2 (HF-R)	Brown	0	0	120	120	120	120	77	77	0	0	0	0	3.6
P4-3 (HF-Hi)	Black	0	0	120	120	68	68	39	39	0	0	0	0	3.7
P4-6 (CL)	Grey	0	0	151	151	120	120	77	77	0	0	0	0	3.7

CONNECTORS ON ACU

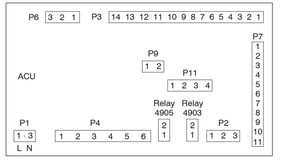

NOTE: There are purposely empty terminals between each of the numbered terminals on P1 connector.

FOR SERVICE TECHNICIAN'S USE ONLY

TOUCH PANEL

Touch Panel and ACU Test

The microwave hood combination is provided with a self-diagnostic routine that can be accessed through the touch keypad.

To initiate diagnostic routine:

1. Plug in microwave oven or reconnect power and press the Cancel keypad to standby ("-").
2. Close door, then press CANCEL - CANCEL - START within 3 seconds.

   IMPORTANT: All display segments will be lit to indicate the Test mode has been entered.
3. Open door. The model number will be displayed.
4. Close door. All display segments will be lit.
5. Press indicated keypad for correct display readout and beep.

NOTE: If the Cancel keypad is pressed during this diagnostic routine, you will exit the Test mode.

Key Tables for Test Mode

Key Name	Function	Display	Buzzer
Start	xx.xx.xx	Gee version check	1 beep
Popcorn	-	key 30	1 beep
Keep Warm	-	key 06	1 beep
Reheat	-	key 24	1 beep
Defrost	-	key 25	1 beep
Soften/Melt	-	key 29	1 beep
Cook Time	-	key 21	1 beep
Cook Power	-	key 22	1 beep
Cook	Humidity sensor check	XXX	1 beep
Brown	-	key 34	1 beep
Options/Clock	HF NTC Thermistor	XXX	1 beep
Add 30 Sec	-	key 20	1 beep
Timed Dual Crisp	-	key 32	1 beep
Dual Crisp	-	Key 2D	1 beep
1	Cavity Light ON	CL	1 beep
2	Cavity Light and Turntable ON	CL TT	1 beep

Key Name	Function	Display	Buzzer
3	-	key 36	1 beep
4	Grill, Cavity light and Turntable on	Grill	1 beep
5	Display 12:33, go into standby (this step must be after humidity sensor check)	12:33	1 beep
6	Hood (Cooktop) Light ON (High)	HL HIGH	1 beep
7	Hood (Cooktop) Light ON (Low)	HL LOW	1 beep
8	Vent Fan ON (High Speed)	HF HIGH	1 beep
9	Vent Fan ON (Low Speed)	HF LOW	1 beep
0	Microwave Oven (1000 W), CL and TT ON	MW	1 beep
Light	-	key 03	1 beep
Turntable set off	-	key 09	1 beep
Fan	-	key 04	1 beep
Cancel	Exit Test Mode	: or xx.xx	1 beep

PARTS LAYOUT (NOT TO SCALE)

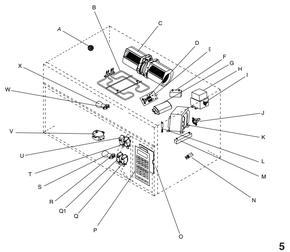

A. Humidity Sensor
B. Grill Heater
C. Hood Exhaust Fan motor assembly
D. Line Fuse
E. Filter Board
F. Motor Capacitor
G. H.V. Capacitor
H. Magnetron
I. Magnetron Thermostat Opens at 329°F (165°C) closes at 266°F (130°C)
J. Cavity Thermostat - opens at 329°F (165°C), non-resettable
K. H.V. Transformer
L. H.V. Diode
M. Cement Resistor
N. NTC Thermistor
O. Electronic control
P. Touch Panel (Membrane Switch)
Q. Secondary Interlock Switch
Q1. Door Interlock Switch
R. Lamp Holder
S. Hood (Cooktop) Lamp
T. Monitor Interlock Switch
U. Primary Interlock Switch
V. Turntable Motor
W. Lamp Holder
X. Cavity Lamp

FOR SERVICE TECHNICIAN'S USE ONLY

POWER OUTPUT MEASUREMENT

The power output of the magnetron can be measured using the following "Voltage Measurement at Power Source" and "Output Test" sections. Before you perform the test:

- Make sure that the oven cavity is cool and clean.
- Check the line voltage at the wall outlet while microwave oven is operating. See the "Voltage Measurement at Power Source" section.

Tools Needed

- 2-cup measuring cup
- Thermometer
- Voltmeter/ohmmeter

Voltage Measurement at Power Source

1. Fill the measuring cup with 2 cups (500 mL) of tap water.
2. Place in the center of the microwave oven cavity.
3. Operate the microwave oven on high power for 1 minute.
4. While the microwave oven is operating, measure the line voltage at the power source. See the "Measure Voltage" illustration.
5. Verify the voltage is constant during microwave oven operation. If voltage drops below 108 V, contact a qualified electrician to check your electrical supply.
6. Make note of the voltage while the microwave oven is running and proceed to the output test.

Measure Voltage

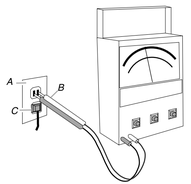

A. House power supply wall outlet
B. Voltmeter/ohmmeter test leads
C. Microwave oven plug

Output Test

1. Fill the measuring cup with 2 cups (500 mL) of 70°F (21°C) tap water.
2. Stir the water with the thermometer to ensure uniform temperature. Add warm or cool water to bring the water to the correct temperature.
3. Place the measuring cup in the center of the microwave oven cavity.
4. Operate the microwave oven on high power for 1 minute.
5. Remove the measuring cup and stir the water with the thermometer for about 20 seconds.
6. Record the temperature of the water.
7. Refer to the model serial tag on the microwave oven to acquire wattage output rating of the microwave oven.
8. Using the following chart, determine if the output of the microwave oven is within the range listed based on the line voltage and wattage rating of the microwave oven.

Water Temperature for Line Voltage and Wattage Rating

Voltage	700 W	1000 W	1200 W
120 V	96°F to 102°F (36°C to 39°C)	110°F to 116°F (43°C to 47°C)	124°F to 130°F (51°C to 54°C)
108 V	91°F to 97°F (33°C to 36°C)	101°F to 107°F (38°C to 42°C)	111°F to 117°F (44°C to 47°C)

FOR SERVICE TECHNICIAN'S USE ONLY

COMPONENT TESTS

IMPORTANT:

- Unplug microwave oven or disconnect power.
- Discharge the high-voltage capacitor and remove the lead wires from the primary winding of the high-voltage transformer before conducting any of the following tests.
- Remove the lead wires from the related component before conducting any of the following tests.
- All operational checks using microwave energy must be done with the microwave oven loaded with a minimum of 8 oz (250 mL) of water in a microwave-safe container.
- Conduct a microwave energy test after performing any tests or repairs to the microwave oven.
- Check that all wire leads are in the correct positions before operating the microwave oven.
- Grasp wire connectors when removing the wire leads from microwave oven parts.
- All testing must be done with an ohmmeter having a sensitivity of 20,000 ohms per volt DC or greater and powered by at least a 9 V battery.

Components	Test/Results
H.V. Transformer Filament (orange/red wires) Primary Secondary (white wire - ground to transformer case)	1. Unplug microwave oven or disconnect power. 2. Remove wire leads. 3. Measure resistance: ■ Primary winding: Less than 0.5 ohm (approximate) ■ Secondary winding: 110 ohms (approximate) ■ Filament winding: 0 ohms ■ Primary winding to grounding: Normal: Infinite ■ Filament winding to grounding: Normal: Infinite
Magnetron	1. Unplug microwave oven or disconnect power. 2. Remove wire leads. 3. Measure resistance: ■ Filament terminal: Normal: Less than 1 ohm ■ Filament to chassis: Normal: Infinite
H.V. Capacitor	1. Unplug microwave oven or disconnect power. 2. Remove wire leads. 3. Measure resistance: ■ Terminal to terminal: Normal: Momentarily indicates several ohms and then gradually returns to infinite. ■ Terminal to case: Normal: Infinite
H.V. Diode	**NOTE:** Some inexpensive meters may indicate infinite resistance in both directions. 1. Unplug microwave oven or disconnect power. 2. Measure resistance: ■ Forward: Normal: Continuity ■ Reverse: Normal: Infinite
Turntable Motor	1. Unplug microwave oven or disconnect power. 2. Remove wire leads. 3. Measure resistance: ■ Normal: 2.4k to 3.2k ohms (approximate)
Motor Capacitor	1. Unplug microwave oven or disconnect power. 2. Remove wire leads. 3. Measure motor capacitor: ■ Normal: Momentarily 0 ohms, then goes to infinite
Humidity Sensor WH RD BK Resistor	1. Unplug microwave oven or disconnect power. 2. Remove the 3-pin connector from the electronic control (P6). **NOTE:** Do not remove the attached resistor which is used for internal resistance calibration. 3. Measure resistance across pins 1 and 3, and across pins 2 and 3: ■ Normal: 2.8k ohms (approximate) at 77°F (28°C)+/-18°F (-10°C)
Hood Exhaust Fan Motor	1. Unplug microwave oven or disconnect power. 2. Remove wire leads. 3. Measure resistance: ■ High Speed—Normal: Red (RD) and Blue (BU) wires: 70 to 100 ohms (approximate); Blue (BU) and Black (BK) wires: 30 to 60 ohms (approximate) ■ Low Speed—Normal: Red (RD) and Blue (BU) wires: 70 to 100 ohms (approximate); Blue (BU) and White (WH) wires: 50 to 80 ohms (approximate)

FOR SERVICE TECHNICIAN'S USE ONLY

Components	Test/Results
HF NTC Thermistor	1. If "NTC SHORT, CALL FOR SERVICE" or "NTC OPEN, CALL FOR SERVICE" scrolls on display, unplug microwave oven or disconnect power. 2. Measure resistance: ■ Normal: 10k ohms +/-5% at 77°F (25°C)
Power Resistor	1. Unplug microwave oven or disconnect power. 2. Remove wire leads. 3. Measure resistance: ■ Normal: 65 ohms/65 W
AC Line Filter Board	1. Unplug microwave oven or disconnect power. 2. Remove wire leads. 3. Measure resistance: ■ Normal: L-IN to L-OUT (coil): Less than 1 ohm; N-IN to N-OUT (coil): Less than 1 ohm
Thermostats Cavity Thermostat Magnetron Thermostat	**NOTE:** Refer to "Parts Layout" for opening and closing temperatures. 1. Unplug microwave oven or disconnect power. 2. Remove wire leads. 3. Measure continuity: ■ Normal: Continuity

SCHEMATIC DIAGRAM

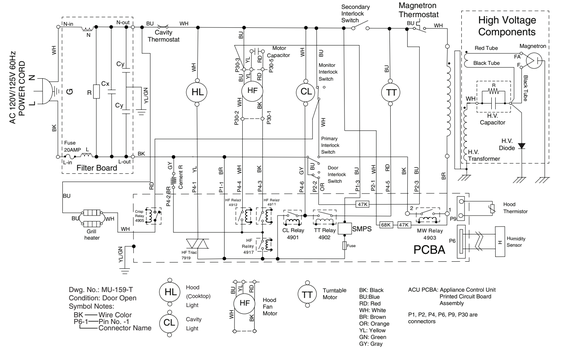

Dwg. No.: MU-159-T
Condition: Door Open
Symbol Notes:
BK — Wire Color
P6-1 — Pin No. -
Connector Name

W11297782B
©2019 All rights reserved.

04/19