Multimedia Enhanced

Whirlpool®

TECHNICAL MANUAL

Whirlpool® and Maytag® 4.7/5.3 Cubic Foot Top Load Washer

W11416787B

FOREWORD

This Technical Manual (Part No. W11416787B), provides the In-Home Service Professional with service information for the “Whirlpool® and Maytag® 4.7/5.3 cu ft Top Load Washer.” For specific operating information on the model being serviced, refer to the “Owner's Manual” and “Quick Start Guide” provided with the oven.

The Wiring Diagram used in this Technical Manual is typical and should be used for training purposes only. Always use the Wiring Diagram supplied with the product tech sheet when servicing the washer.

For specific operating and installation information on the model being serviced, refer to the literature provided with the washer.

GOALS AND OBJECTIVES

The goal of this Technical Manual is to provide information that will enable the In-Home Service Professional to properly diagnose malfunctions and repair the “Whirlpool® and Maytag® 4.7/5.3 cu ft Top Load Washer.”

The objectives of this Technical Manual are to:

- Understand and follow proper safety precautions.
- Successfully troubleshoot and diagnose malfunctions.
- Successfully perform necessary repairs.
- Successfully return the washer to its proper operational status.

WHIRLPOOL CORPORATION assumes no responsibility for any repairs made on our products by anyone other than authorized In-Home Service Professionals.

©2021 Whirlpool Corporation. Benton Harbor, MI 49022

TABLE OF CONTENTS

Whirlpool® and Maytag® 4.7/5.3 Cubic Foot Top Load Washer

SECTION 1: GENERAL INFORMATION 1-01
- WASHER SAFETY 1-02
- PRODUCT SPECIFICATIONS 1-03
- PRODUCT FEATURES 1-07
- MODEL NOMENCLATURE 1-09
- TECH SHEET AND MODEL AND SERIAL NUMBER LABEL LOCATION 1-11

SECTION 2: DIAGNOSTICS AND TROUBLESHOOTING 2-01
- SAFETY 2-02
- SERVICE GUIDE 2-03
- ACTIVATING SERVICE MODE 2-04
- COMPONENT ACTIVATION FUNCTION CHART 2-06
- SENSOR FEEDBACK FUNCTION CHART 2-07
- DIAGNOSTIC CYCLE CHART 2-08
- FAULTS AND ERROR CODES 2-09
- TROUBLESHOOTING GUIDE 2-14

SECTION 3: COMPONENT TESTING 3-01
- SAFETY 3-02
- WIRING DIAGRAM 3-03
- MAIN CONTROL (ACU) CONNECTORS AND PINOUTS 3-06
- TROUBLESHOOTING TESTS 3-09
- TROUBLESHOOTING GUIDE FOR CONNECTED WASHER 3-25
- COMPONENT LOCATION 3-28

SECTION 4: COMPONENT ACCESS 4-01
- TOP LOAD CONSOLE REMOVAL 4-02
- REMOVING THE USER INTERFACE (UI) 4-03
- REMOVING THE WATER INLET VALVE 4-04
- REMOVING THE MAIN CONTROL 4-04
- REMOVING THE BULK DISPENSER (ONLY ON CERTAIN MODELS) 4-05
- REMOVING THE TUB RING, IMPELLER, AND BASKET 4-06
- REMOVING THE 2 IN 1 AGITATOR (FOR APPLICABLE MODELS ONLY) 4-09
- REMOVING THE MOTOR AND DRIVE ASSEMBLY (DIRECT DRIVE MODELS) 4-10
- REMOVING THE PUMPS (DIRECT DRIVE MODELS) 4-12
- REMOVING THE LID LOCK 4-13
- REMOVING THE LID AND A HINGE 4-14
- REMOVING THE SHIFTER (BELT-DRIVEN MODELS) 4-15
- REMOVING THE DRAIN PUMP (BELT-DRIVEN MODELS) 4-16
- REMOVING THE DRIVE BELT AND MOTOR (BELT-DRIVEN MODELS) 4-17
- REMOVING THE SPLUTCH (BELT-DRIVEN MODELS) 4-18
- REMOVING THE GEARCASE (BELT-DRIVEN MODELS) 4-19

Notes

Section 1: General Information

This section provides general safety, parts, and information for the “Whirlpool® and Maytag® 4.7/5.3 cu ft Top Load Washer.”

- Washer Safety
- Product Specifications
- Product Features
- Model Nomenclature
- Tech Sheet and Model and Serial Number Label Location

Washer Safety

Your safety and the safety of others are very important.

We have provided many important safety messages in this manual and on your appliance. Always read and obey all safety messages.

This is the safety alert symbol.

This symbol alerts you to potential hazards that can kill or hurt you and others.

All safety messages will follow the safety alert symbol and either the word “DANGER” or “WARNING.” These words mean:

DANGER — **You can be killed or seriously injured if you don't immediately follow instructions.**

WARNING — **You can be killed or seriously injured if you don't follow instructions.**

All safety messages will tell you what the potential hazard is, tell you how to reduce the chance of injury, and tell you what can happen if the instructions are not followed.

IMPORTANT: Electrostatic Discharge (ESD) Sensitive Electronics
ESD problems are present everywhere. Most people begin to feel an ESD discharge at approximately 3000 V. It takes as little as 10 V to destroy, damage, or weaken the main control assembly. The new main control assembly may appear to work well after repair is finished, but a malfunction may occur at a later date due to ESD stress.

- **Use an anti-static wrist strap. Connect wrist strap to green ground connection point or unpainted metal in the appliance**

-OR-

- **Touch your finger repeatedly to a green ground connection point or unpainted metal in the appliance.**
- **Before removing the part from its package, touch the anti-static bag to a green ground connection point or unpainted metal in the appliance.**
- **Avoid touching electronic parts or terminal contacts; handle electronic control assembly by edges only.**
- **When repackaging main control assembly in anti-static bag, observe above instructions.**

Product Specifications

Whirlpool® 4.7/5.3 cu ft Top Load Washer

Dimensions	
Capacity (DOE) US (cu ft)	4.7 or 5.3
Capacity IEC CAN (cu ft)	$5^{1}/_{2}$ or 6.1
Depth With Door Open 90 Degree (IN, inches)	$27^{7}/_{8}$
Depth (IN, inches)	$27^{7}/_{8}$
Height to Top of Cabinet (IN, inches)	$38^{1}/_{8}$ or $39^{3}/_{8}$
Height with Lid Open	$57^{1}/_{4}$ or $58^{1}/_{2}$
Maximum Height (IN, inches)	$41^{13}/_{16}$ or $43^{1}/_{2}$
Minimum Height (IN, inches)	$41^{3}/_{16}$ or $42^{1}/_{2}$
Washer Door Opening Width (IN, inches)	26.19 or 26.81
Width (IN, inches)	$27^{1}/_{4}$
Exterior	
Adjustable Feet	Yes
Lid/Door Finish	Edge Glass
Lid/Door Lock	Yes
Lid/Door Swing	NA
Slow Close Lid	Yes
Window	Yes
Details	
Advanced Vibration Control™	Yes
Automated Dispenser	Drawer or Load & Go™
Automatic Load Size Sensing Technology	Yes
Dispense System	Bulk Load Detergent, Fabric Softener and Bleach, Single Dose, Load & Go™
Out of Balance Sensing	Yes
Suspension System	4 Springs, 4 Dampers, Liquid Filled Upper Balance Ring
Drum Material	Stainless Steel
Drum Rear/Base Material	Plastic
Hoses Included	Drain Hose
Motor Drive Type	Belt or Direct Drive
Motor Horsepower	1/3 HP or 9/10 HP
Wash Action	Impeller or Agitator
Water Factor	3.97 or 4.06 or 4.97 or 5
Maximum Spin Speed (RPM)	750 or 850
Controls	
Automatic Temperature Controls	Yes
Control Type	Capacitive Touch
Electronic Display Type	2.4" LCD
End of Cycle Signal	Yes
Location of Controls	Rear Console
Feedback-Status Indicators	Add Garment, Connected, Done, Lid Lock, Remote Enabled, Sensing, Washing
LED Color	White

Cycles	
Number of Wash Cycles	36
Washer Cycle Selections	Bulky Items, Clean Washer with affresh®†, Cold Wash, Colors, Delicates, Drain and Spin, Favorite, Heavy Duty, Normal, Quick, Quick Wash, Regular, Rinse and Spin, Sanitize with Oxi, Towels, Whites, Wrinkle Control
Options	
Number of Washer Options	8
Washer Option Selections	Custom Cycle, Fabric Softener, Presoak, Sales Demo Mode
Modifers	
Number of Soil Levels	5
Soil Selections	Light, Extra Light, Extra Heavy, Normal, Heavy
Number of Wash/Rinse Temperatures	5
Rinse Temperature	Cold
Temperature Selections	Hot, Cold, Tap Cold, Cool, Warm
Number of Rinse Options	2
Number of Water Levels	4
Water Levels	Auto, High, Max Fill, Medium
Number of Spin Speeds	3
Spin Speed Selections	Fast, Medium, Off
Delay Start	Up to 12 hours
Features	
Fabric Brush	Yes
Water Faucet	Yes
Recirculation (visible)	Yes
Electrical	
Hz	60
Power Cord Included	Yes
Volts	120
Watts	248 or 709
Compatibility	
Connectivity	Android, iOS
Works With	WiFi, App, Remote Access, Voice Controlled

†Affresh® is a registered trademark of Whirlpool, U.S.A. Used with permission.

Maytag® 4.7/5.3 cu ft Top Load Washer

Dimensions	
Capacity (DOE) US (cu ft)	4.7 or 5.3
Capacity IEC CAN (cu ft)	5.4 or 6.1
Depth With Door Open 90 Degree (IN, inches)	$27^{7}/_{8}$
Depth (IN, inches)	$27^{7}/_{8}$
Height to Top of Cabinet (IN, inches)	$38^{1}/_{8}$ or $39^{3}/_{8}$
Height with Lid Open	$57^{1}/_{4}$ or $58^{1}/_{2}$
Maximum Height (IN, inches)	$42^{3}/_{16}$ or $43^{7}/_{8}$
Minimum Height (IN, inches)	$41^{9}/_{16}$ or $42^{7}/_{8}$
Washer Door Opening Width (IN, inches)	23.19 or 23.81
Width (IN, inches)	$27^{1}/_{4}$
Exterior	
Adjustable Feet	Yes
Lid/Door Finish	Edge Glass
Lid/Door Lock	Yes
Lid/Door Swing	NA
Slow Close Lid	Yes
Window	Yes
Details	
Advanced Vibration Control™	Yes
Automated Dispenser	Drawer
Automatic Load Size Sensing Technology	Yes
Dispense System	Bleach, Single Dose, Detergent, Fabric Softener
Out of Balance Sensing	Yes
Suspension System	4 Springs, 4 Dampers, Liquid Filled Upper Balance Ring
Drum Material	Stainless Steel
Drum Rear/Base Material	Plastic
Hoses Included	Drain Hose
Motor Drive Type	Belt or Direct Drive
Motor Horsepower	1/3 HP or 9/10 HP
Wash Action	Impeller or Agitator
Water Factor	4 or 4.04 or 4.05 or 4.89
Maximum Spin Speed (RPM)	750 or 850
Maytag Commercial Components	Motor and Washer Basket
Controls	
Automatic Temperature Controls	Yes
Control Type	Knobs
Electronic Display Type	2.4" LCD
End of Cycle Signal	Yes
Location of Controls	Rear Console
Feedback-Status Indicators	Add Garment, Connected, Done, Lid Lock, Remote Enabled, Sensing, Washing
LED Color	White

Cycles	
Number of Wash Cycles	11 or 13 or 14
Washer Cycle Selections	Bulky Items, Clean Washer with affresh®, Colors, Custom Cycle, Delicates, Drain and Spin, Heavy Duty, Normal - Regular, Quick Wash, Sanitize with Oxi, Soak, Towels, Whites, Wrinkle Control
Options	
Number of Washer Options	6
Washer Option Selections	Custom Cycle, Extra Power, Fabric Softener, Sales Demo Mode
Modifiers	
Number of Soil Levels	5
Soil Selections	Light, Extra Light, Medium Heavy, Extra Heavy, Normal, Heavy
Number of Wash/Rinse Temperatures	5
Temperature Selections	Hot, Cold, Tap Cold, Cool, Warm
Number of Rinse Options	2
Rinse Temperature	Cold
Number of Water Levels	4
Water Levels	Auto, High, Max Fill, Medium
Number of Spin Speeds	3
Spin Speed Selections	Fast, Medium, Off
Delay Start	Up to 12 hours
Pre Soak	No
Features	
Water Faucet	Yes
Recirculation (visible)	Yes
Electrical	
Hz	60
Power Cord Included	Yes
Watts	248 or 709
Compatibility	
Connectivity	Android, iOS
Works With	WiFi, App, Remote Access

Product Features

Control Panel

Whirlpool® 4.7/5.3 cu ft Top Load Washer

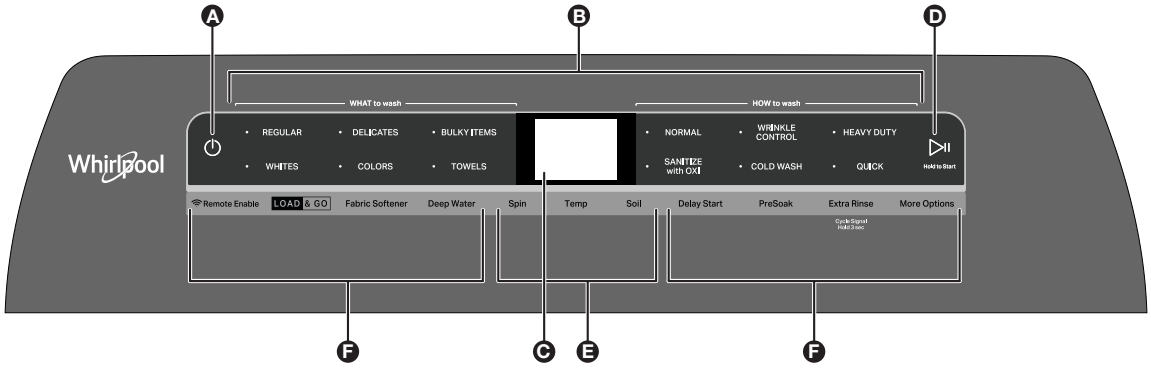

Appearance may vary depending on model.

A. POWER

Touch to turn on/off or to stop/cancel a cycle.

B. WHAT TO WASH/HOW TO WASH

First select a cycle from the “What to Wash” and then select the “How to Wash” to get the best combination cycle available for the type of items you are going to wash. See “Cycle Guide” for cycle details.

C. LCD TIME/STATUS DISPLAY

The display shows the time required for the cycle to complete. Factors such as load size and water pressure may affect the time shown in the display. Tightly packed loads, unbalanced loads, or excessive suds may cause the washer to adjust the cycle time as well.

If you have set a delay start to the cycle, the display will show the delay time adjusted.

ADD GARMENT

When Add Garment is lit, you may pause the cycle, open the lid, and add items. Touch and hold the START/PAUSE button to start the cycle again.

D. START/PAUSE

Touch and hold the START/PAUSE to start cycle. Touch during a cycle to pause cycle and unlock lid.

NOTE: If machine is spinning it may take longer to unlock lid.

E. CYCLE MODIFIERS

(Not all modifiers are available on all cycles)

SPIN

Touch to modify the cycle’s available spin speeds (Off, Medium, Fast).

TEMP

Touch to modify the cycle’s available water temperatures (Tap Cold, Cold, Cool, Warm, Hot).

SOIL

Touch to modify the cycle’s available soil levels. Increase soil level for heavily soiled items and decrease soil level for lightly soiled items (Extra Light, Light, Normal, Heavy, Extra Heavy).

F. CYCLE OPTIONS

(Not all options are available on all cycles)

REMOTE ENABLE

Touch each time you want to remotely control via the Whirlpool® app. Follow the instructions in the “GET THE WHIRLPOOL® APP AND GET CONNECTED." Opening the lid cancels “remote enable.”

LOAD & GO™ Bulk Dispenser

The Load & Go™ dispenser holds 1L of detergent and determines the best time and amount to add detergent to the load.

FABRIC SOFTENER

Touch to add more water to the washer from the cycle’s auto sensed level (Auto, Medium, High, Max Fill).

DEEP WATER

Use this option to add the maximum amount of water to your wash cycle.

NOTE: Expect longer cycle times due to extended fill times when using the Deep Water option.

DELAY START

Touch to delay the start of the wash cycle for up to 12 hours.

PRESOAK

Touch to add a presoak period to any cycle to help loosen tough stains. The washer will fill, pause to soak, and then begin the selected cycle (15 mins, 30 mins, 60 mins, 120 mins).

EXTRA RINSE

Touch to automatically add a second rinse available on most cycles.

CYCLE SIGNAL

Touch to turn the end of cycle signal on/off and adjust the tone volume when a button is touched.

MORE OPTIONS

- Drain and Spin
- Rinse and Spin
- Clean Washer with affresh®
- Favorite Cycle

Maytag® 4.7/5.3 cu ft Top Load Washer

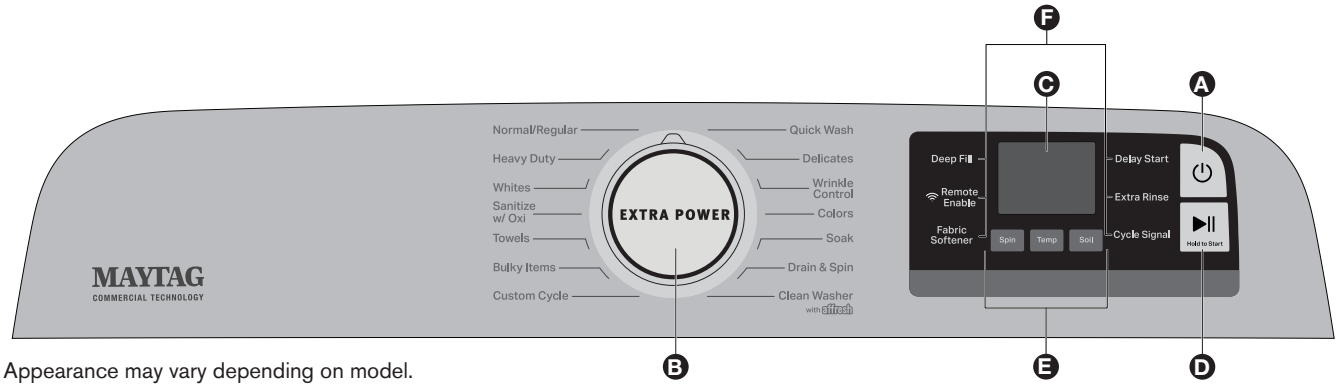

Appearance may vary depending on model.

A. POWER

Touch to turn on/off or to stop/cancel a cycle.

B. CYCLE KNOB

Turn knob to select desired cycle.

EXTRA POWER

Press to boost stain fighting on selected cycle.

C. DISPLAY LCD

The display shows the time required for the cycle to complete. Factors such as load size and water pressure may affect the time shown in the display. Tightly packed loads, unbalanced loads, or excessive suds may cause the washer to adjust cycle time as well.

ADD GARMENT

When Add Garment is lit, you may open the lid, which automatically pauses the cycle, and add items. To resume, close the lid and hold the START/PAUSE button to start the washer again.

D. START/PAUSE

Touch and hold the START/PAUSE button to start cycle. Touch during a cycle to pause cycle and unlock lid.

NOTE: If machine is spinning it may take longer to unlock lid.

E. CYCLE MODIFIERS (Not all modifiers are available on all cycles)

SPIN

Touch to modify the cycle's available spin speeds (Off, Medium, Fast).

TEMP

Touch to modify the cycle's available temperatures (Tap Cold, Cold, Cool, Warm, Hot).

SOIL

Touch to modify the cycle's available soil levels. Increase soil level for heavily soiled items and decrease soil level for lightly soiled items (Extra Light, Light, Normal, Heavy, Extra Heavy).

F. CYCLE OPTIONS (Not all options are available on all cycles)

DEEP FILL

Touch to add more water to the washer from the cycle's auto sensed level (Auto, Medium, High, Max Fill).

REMOTE ENABLE

Touch each time you want to remotely control via the Maytag™ app. Follow the instructions in the "GET THE MAYTAG™ APP AND GET CONNECTED." Opening the lid cancels "Remote Enable."

FABRIC SOFTENER

Touch to let the machine know when you have added fabric softener to the dispenser drawer.

DELAY START

Touch to delay the start of the wash cycle for up to 12 hours.

EXTRA RINSE

Touch to automatically add a second rinse available on most cycles.

CYCLE SIGNAL

Touch to turn the end of cycle signal on/off and adjust the tone volume when a button is touched.

Model Nomenclature

Whirlpool® Model Nomenclature

MODEL NUMBER	W	T	W	5105	H	C

Brand
W = Whirlpool
M = Maytag

Access/Fuel
H = Horizontal (Front load)
V/T = Vertical (Top load)
G = Gas
E = Electric
W = Workspace

Product Type
B = Combo
D = Dryer
P = Pedestal
T = Thin Twin/Stack
W = Washer

Capacity
5XXX = 4.7 cu ft
6XXX = 4.8 cu ft
7XXX = 5.3 cu ft
8XXX = 5.3 cu ft

Production Year
H = 2018
L = 2021

Color Code
W = White
C = Chrome Shadow

Maytag® Model Nomenclature

MODEL NUMBER	M	V	W	6230	H	W

Brand
M = Maytag

Access/Fuel
H = Horizontal (Front load)
V = Vertical (Top load)
G = Gas
E = Electric
W = Workspace

Product Type
B = Combo
D = Dryer
P = Pedestal
T = Thin Twin/Stack
W = Washer

Capacity
6XXX = 4.7 cu ft
7XXX = 5.2 cu ft
8XXX = 5.3 cu ft

Production Year
H = 2018
L = 2021

Color
W = White
C = Metallic Slate

Tech Sheet and Model and Serial Number Label Location

The Model and Serial Number Label and Tech Sheet locations are shown below:

Tech Sheet
(Behind Front Panel)

Notes

Section 2: Diagnostics and Troubleshooting

This section provides diagnostics, fault codes, and troubleshooting information for the "Whirlpool® and Maytag® 4.7/5.3 cu ft Top Load Washer."

- Safety
- Service Guide
- Activating Service Mode
- Component Activation Function Chart
- Sensor Feedback Function Chart
- Diagnostics Cycle Chart
- Faults and Error Codes
- Troubleshooting Guide

For Service Technician Use Only

Safety

⚠ DANGER

Electrical Shock Hazard

Only authorized technicians should perform diagnostic voltage measurements.

After performing voltage measurements, disconnect power before servicing.

Failure to follow these instructions can result in death or electrical shock.

⚠ WARNING

Electrical Shock Hazard

Disconnect power before servicing.

Replace all parts and panels before operating.

Failure to do so can result in death or electrical shock.

Voltage Measurement Safety Information

When performing live voltage measurements, you must do the following:

- **Verify the controls are in the off position so that the appliance does not start when energized.**
- **Allow enough space to perform the voltage measurements without obstructions.**
- **Keep other people a safe distance away from the appliance to prevent potential injury.**
- **Always use the proper testing equipment.**
- **After voltage measurements, always disconnect power before servicing.**

IMPORTANT: Electrostatic Discharge (ESD) Sensitive Electronics

ESD problems are present everywhere. Most people begin to feel an ESD discharge at approximately 3000 V. It takes as little as 10 V to destroy, damage, or weaken the main control assembly. The new main control assembly may appear to work well after repair is finished, but a malfunction may occur at a later date due to ESD stress.

- Use an anti-static wrist strap. Connect wrist strap to green earth connection point or unpainted metal in the appliance.

  – OR –

  Touch your finger repeatedly to a green ground connection point or unpainted metal in the appliance.
- Before removing the part from its package, touch the anti-static bag to a green ground connection point or unpainted metal in the appliance.
- Avoid touching electronic parts or terminal contacts; handle electronic control assembly by edges only.
- When repackaging main control assembly in anti-static bag, observe above instructions.

IMPORTANT SAFETY NOTICE — “For Technicians only”

This service data sheet is intended for use by persons having electrical, electronic, and mechanical experience and knowledge at a level generally considered acceptable in the appliance repair trade. Any attempt to repair a major appliance may result in personal injury and property damage. The manufacturer or seller cannot be responsible, nor assume any liability for injury or damage of any kind arising from the use of this data sheet.

For Service Technician Use Only

Service Guide

Before servicing, check the following:

- Make sure there is power at the wall outlet.
- Has a household fuse blown or circuit breaker tripped? Was a regular fuse used? Inform customer that a time-delay fuse is required.
- Are both hot and cold water faucets open and water supply hoses unobstructed?
- Make sure drain hose is not sealed into drain pipe, and that there is an air gap for ventilation. Ensure drain height is between 39" (0.99 m) and 8' (2.4 m) above the floor.
- All tests/checks should be made with a VOM (volt-ohm-milliammeter) or DVM (digital-voltmeter) having a sensitivity of 20,000 Ω per volt DC or greater.
- Resistance checks must be made with washer unplugged or power disconnected.

  IMPORTANT: Avoid using large diameter probes when checking harness connectors as the probes may damage the connectors upon insertion.

- Check all harnesses and connections before replacing components. Look for connectors not fully seated, broken or loose wires and terminals, or wires not pressed into connectors far enough to engage metal barbs.
- A potential cause of a control not washer functioning is corrosion or contamination on connections. Use an ohmmeter to check for continuity across suspected connections.
- **To properly check voltage:**
  1. Unplug appliance or disconnect power.
  2. Attach voltage measurement probes to proper connectors.
  3. Plug in appliance or reconnect power and verify voltage reading.
  4. Unplug appliance or disconnect power after completing voltage measurements.

Diagnostics LED – Main Control (ACU)

A troubleshooting tool has been implemented onto the main control board—a diagnostic LED.

LED Flashing – The Control is detecting correct incoming line voltage and the processor is functioning.

LED OFF or ON – Control malfunction.Perform Test #1: Main Control (ACU) for respective model from section Troubleshooting Tests to verify main control functionality.

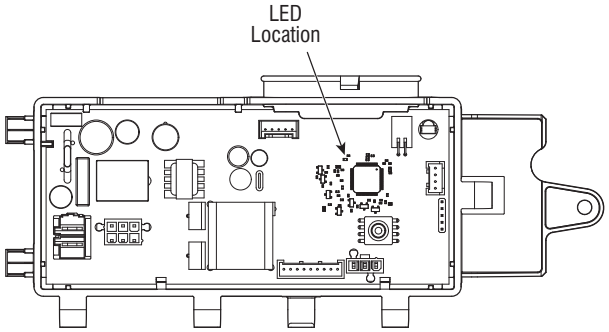

Figure 1 - Diagnostic LED (Maytag® Belt Drive Models)

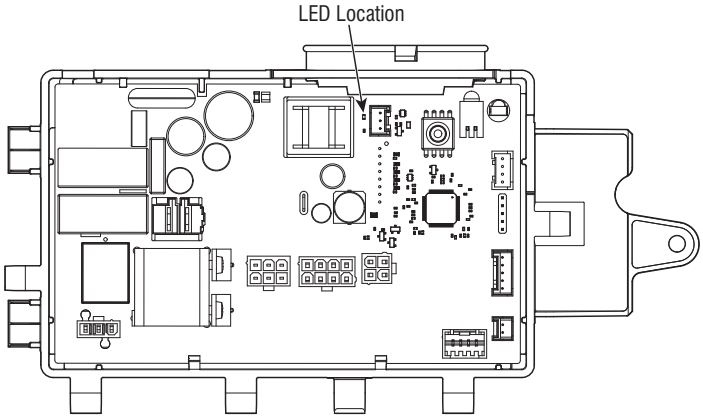

Figure 2 - Diagnostic LED (Whirlpool® Belt Drive Models)

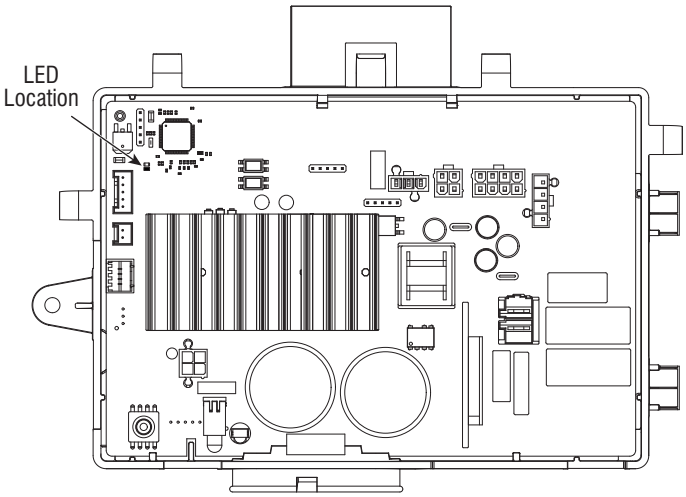

Figure 3 - Diagnostic LED (Whirlpool® and Maytag® Direct Drive Models)

Service Mode

These tests allow factory or service personnel to test and verify all inputs to the main control board. You may want to do a quick and overall checkup of the washer with these tests before going to specific troubleshooting tests.

For Service Technician Use Only
Activating Service Mode

1. Be sure the washer is in standby mode (plugged in with all indicators off).

2. Select any three (3) buttons (except POWER) and follow the steps below, using the same button:

Within Eight (8) Seconds,

- Press and Release the 1st selected button.
- Press and Release the 2nd selected button.
- Press and Release the 3rd selected button.
- Repeat this 3 button sequence 2 more times.

3. If Service Mode test mode has been activated successfully, the text "This area is for Service Technicians only" will be displayed on the LCD screen and additional navigational instructions will cycle through.

4. Follow the instructions shown on the screen for navigation into and within Service Mode. See also Service Mode Entry and Navigation sections as below.

NOTE: The Service Mode will time out after 5-10 minutes of user inactivity, or shut down if AC power is removed from the washer.

Unsuccessful Activation

If entry into diagnostic mode is unsuccessful, refer to the following indication and action:

Indication: The screen does not display the correct text.

Action: Retry the Activating Service Mode instructions with three different buttons.

- If indicators come on, try to change the function for the three buttons used to activate the diagnostic test mode. If any button is unable to change the function, something is faulty with the button, and it will not be possible to enter the diagnostic mode using that button. Replace the user interface.
- If no indicators come on after selecting the cycle, go to Test #1: Main Control (ACU). from section Troubleshooting Tests.

Service Mode Entry

To enter Service Mode, and press the 'Select/Enter' key (Key 2) located on the upper right of the display as shown in Figure 4.

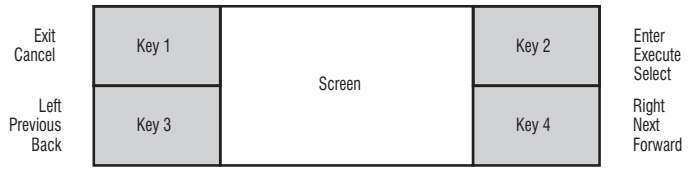

Figure 4 - HMI screen and navigational buttons.

NOTE: The layout shown above is not labeled per the HMI keys. The name of each key may vary with model. The relative position to the screen identifies the key's function.

Navigation

Use 'Left' and 'Right' keys to step through pages. When the desired screen is reached, press 'Select/Enter' to enter into this screen or activate the action. Use the 'Back/Exit' key to return to the previous screen or cancel an action.

Exiting Service Mode

To exit from Service Mode back to customer operation there are two options:

1. Navigate to the 'Exit Service Mode' screen from Service Mode.

2. Repeatedly press the 'Back/Exit' button until the screen returns to customer operation mode.

Service Mode Function

The following functions are available in Service Mode:

Function	Options
Factory Diagnostics	Factory Cycle, DLMS Calibration Cycle, Factory Calibration Cycle, Factory Reset.
System Information	Model Number, Serial Number, Connectivity Status, System Version, HMI Version.
Fault History	Clear Fault History, Fault History, Fault Code Display.
Service Diagnostics	HMI Test, Component Activation, Sensor Feedback, Diagnostic Cycle, Demo Mode, Exit Service Mode.

Factory Diagnostics

The Factory Diagnostics menu includes four options: Factory Cycle, DLMS Calibration Cycle, Factory Calibration Cycle, and Factory Reset.

Factory Cycle: FOR FACTORY TEST ONLY.

DLMS Calibration Cycle: This calibrates the main control to the washer for optimal load size.

Calibration must be performed when any of the following components have been replaced: Main Control, Basket, Drive Assembly, Suspension, Motor and Shifter. Not performing calibration will result in poor wash performance.

Do NOT interrupt calibration, disturb washer, or remove power; otherwise, calibration must be repeated.

Lid must be down to perform test.

Basket must be empty to perform test (no water or clothes).

Calibration cycle runs for approximately 2-4 minutes. Cycle completes when lid unlocks and washer returns to the original service diagnostic screen seen prior to starting the cycle.

Factory Calibration Cycle: FOR FACTORY TEST ONLY.

Factory Reset: Resets the unit to the original factory settings.

System Information

From Service Mode select System Information to view information such as Model Number, Serial Number, Connectivity Status, System Versions, and Software Build date. Use the 'Right' button to navigate through these screens. Some of these may also have additional information which can be accessed by selecting that screen.

Connectivity Status

This may be accessed through System Information. The following screens may be viewed using the 'Right' and 'Left' keys:

SAID Number: Displays machine specific SAID number.

For Service Technician Use Only

Connected to SSID: Displays the SSID the unit is connected to or '(not connected)'.

RSSI to Customer AP: Displays the RSSI the unit is connected to or '(not connected)'.

IP Address: Displays the IP address the unit is connected to or '(not connected)'.

Internet Connection: Selecting this will check the internet connection.

Connection to Broker: Displays true/false if the machine is connected to a broker.

Claimed State: Displays true/false if the machine has been claimed by the customer.

Fault History

Past machine faults may be viewed and cleared through this service menu. Enter Service Mode and navigate to "Fault History." Enter this mode to view. Review the Faults and Error Codes for the recommended procedure. If there is no saved fault code, the display will show 'Fault History Empty'.

Fault/Error Code Display Method

Fault codes are displayed in the format F# E#. The F# indicates the suspect System/Category. The E# indicates the suspect component system.

Up to **four** Fault/Error codes may be stored.

Active Fault Code Display in Service Test Mode

During any Service Mode operation, a fault could occur. Depending on the specific fault, the display may show the active fault code. Only one active fault code can be displayed at a time. All fault codes will be recorded in "Fault History."

Clear Fault History

To clear stored fault codes, enter Service Mode, then Fault History. Use the 'Left' and 'Right' keys to navigate to 'Clear Fault History'. Press the 'Select/Enter' key to clear all faults.

Service Diagnostics

This mode is used to identify the root cause of an issue by isolating each component. Use the 'Left' and 'Right' navigation keys to find the desired function and use the 'Select/Enter' key to active or enter that function.

NOTE: Some features are not available on all models. Therefore the machine will not respond to some features. Please reference the Use and Care Guide for a list of available features for the specific model.

HMI Test

This mode tests various functions of the HMI. The expected behaviors of each are described below.

Key Test: Use the instructions provided on the display to test each of the available keys. To exit this mode, press and hold any key for 3 seconds.

LED Test: Use the instructions provided on the display to test the LED at levels of On, 50%, and Off.

Display Test: Display will show a sequence of colors and patterns on repeat.

Audio Test: Speaker will play a sequence of tones.

Encoder Test: Use the instructions provided on the display to test the encoder. Rotate the knob to each of the positions both clockwise (direction 0) and counter-clockwise (direction 1).

Component Activation

Use the Component Activation Mode to selectively turn on individual components. Navigate to this screen through Service Mode and Service Diagnostics Mode. Any faults that may occur during these activations may or may not appear on the display but will be recorded in the 'Fault History' section. A list of the expected behaviors for each component activation is shown in Component Activation Function Chart.

Sensor Feedback

Use the Sensor Feedback mode to selectively test various sensors. This mode will display real time output values as the sensor measurements change. Navigate to this screen through Service Mode and Service Diagnostics. Any faults that may occur during these activations may or may not appear on the display but will be recorded in the 'Fault History' section. A list of the expected behaviors for each sensor feedback is shown in Sensor Feedback Function Chart.

Diagnostic Cycle

Activation of the diagnostic cycle will automatically run a sequence of component activations. The behavior is outlined in the Diagnostic Cycle Chart. The lid must remain closed for the duration of the cycle but might not be locked. Opening the lid will result in the cycle canceling. Any faults that may occur during these activations may or may not appear on the display but will be recorded in the 'Fault History' section.

Demo Mode

Toggle On/Off not used for diagnosis.

For Service Technician Use Only

Component Activation Function Chart

NOTE: Some loads will not be available on all models.

Opening the lid during activation will stop the action. Press 'Back/Return' key to return to Component Activation. The drain pump may turn on after activation of water valves as a safety feature. Additional features cannot be activated until the drain pump stops.

Function	Notes
Door Lock	Locks the lid, pause 5 seconds, unlocks the lid, pause 5 seconds, complete.
Cold Water Valve	Opens cold water valve for 10 seconds.
Hot Water Valve	Opens hot water valve for 10 seconds.
OXI Valve*	Not available on all models. - Opens OXI valve for 10 seconds.
Fabric Softener Valve	Opens fabric softener valve for 10 seconds.
Add Min Water Level Turn On Heater*	Not available on all models. - Opens cold water valve, fills basket with water, turns on heater.
Recirculation Pump*	Not available on all models. - Turns on recirculation pump for 30 seconds.
Drain Pump	Turns on drain pump for 30 seconds.
Toggle Shifter	Shift to wash, pause 10 seconds, shift to spin, pause 10 seconds, shift to wash, complete. Lid may lock and the basket may spin slightly during shifting.
Motor Slow Agitate	Lid locks, shift to wash, wash on slow for 10 minutes, and unlocks the lid.
Motor Fast Agitate	Lid locks, shift to wash, wash on fast for 10 minutes, and unlocks the lid.
Spin Low Speed	Lid locks, drain to empty, shift to spin, spin up to 140 RPM, hold at 140 RPM for 30 seconds, basket stops, lid unlocks, and shifter releases. Basket may rotate slowly to verify shifter position before spinning up to speed.
Spin Mid Speed	Lid locks, drain to empty, shift to spin, spin up to 500 RPM, hold at 500 RPM for 30 seconds, basket stops, lid unlocks, and shifter releases. Basket may rotate slowly to verify shifter position before spinning up to speed.
Spin High Speed	Lid locks, drain to empty, shift to spin, spin up to 850 RPM, hold at 850 RPM for 30 seconds, basket stops, lid unlocks, and shifter releases. Basket may rotate slowly to verify shifter position before spinning up to speed.
Unbalance Detection	Lid locks, drain to empty, shift to spin, spin up to 500 RPM, hold at 500 RPM for 30 seconds, basket stops, lid unlocks, and shifter releases. Basket may rotate slowly to verify shifter position before spinning up to speed.
Detergent Pump*	Not available on all models. - Dose the bulk detergent for 30 seconds.
Softener Pump*	Not available on all models. - Turn on softener pump for 30 seconds.

*Not available on all models. Display will show that the feature is 'activated' but there is no machine response.

For Service Technician Use Only

Sensor Feedback Function Chart

NOTE: Some loads will not be available on all models.
Press 'Back/Return' key to return to Component Activation.

Function	Notes
Lid Switch	Open and close the lid to view the display change. 0 = Lid Open 1 = Lid Closed
Lid Lock	The lid lock will cycle lock/unlock 3 times with 5 second pauses. The display will update the lid lock state. 1 = Lid Unlocked 2 = Lid Locked
Water Level Pressure Sensor	Hot and cold valves open for 40 seconds, pause for 15 seconds, then drains to empty. Display will update the water level in mm.
Inlet Thermistor	Cold valve open for 20 seconds, then hot valve open for 20 seconds. Drain to empty. Display will update the inlet thermistor temperature throughout.
Detergent Level*	Display will show the current detergent percent level in the Load & Go™ drawer. Output may be less than actual detergent level.
Motor Speed Tachometer*	Display will show the current motor speed. Open the lid and spin the basket slowly to observe this value change. **NOTE:** Spinning above 30 RPM will cause fault F5E3.

*Not available on all models. Display will show that the feature is 'activated' but there is no machine response.

For Service Technician Use Only

Diagnostic Cycle Chart

It is recommended to take note of, then clear the Fault History before running the Diagnostic Cycle.

When the Diagnostic Cycle is executed the display will show "Activated Diagnostic Cycle."

NOTE: The basket must be empty during this test. Some loads will not be available on all models.

Step	Washer Function	Recommended Procedure	Est. Time (s)
1	Warm water fills through the Detergent valve	If no water, use service component activation to manually turn on and test the hot and cold water valves.	60
2	Hot water fills through the Detergent valve	If no water, use service component activation to manually turn on and test the valve.	5
3	Cold water fills through the Detergent valve	If no water, use service component activation to manually turn on and test the valve.	5
4	Water fills through the Fabric Softener valve	If no water, use service component activation to manually turn on and test the softener valve.	5
5	Water fills through the OXI valve*	If no water, use service component activation to manually turn on and test the OXI valve.	5
6	Drain pump turns on	If water is not draining, use service component activation to manually turn on and test the drain pump.	15
7	Recirculation pump turns on*	If the pump does not turn on or water level does not drop, use service component activation to manually turn on and test the recirculation pump.	15
8	Drain and recirculation pump turn on**	If water is not being drained or recirculated, use service component activation to manually turn on and test the drain and recirculation pump.	>30
9	Lid locks	Lid must be closed. If lid does not lock, use service component activation to manually test the lid lock.	5
10	Shift to Wash	Use service component activation to manually test the shifter.	30
11	Wash fast	Use service component activation to manually test the motor.	5
12	Shift to Spin	Use service component activation to manually test the shifter.	30
13	Spin up to 500 RPM then stop	Use service component activation to manually test the motor.	200
14	Shift to Agitate	Use service component activation to manually test the shifter.	30
15	Agitate fast	Use service component activation to manually test the motor.	10
16	Unlock lid	If lid does not unlock, use service component activation to manually test the lid lock.	5

Total test time in minutes is expected to be between 4-7 minutes.

Steps 1-5 will display FILLING. Steps 6-8 will display RINSE. Steps 9-11 and 14-15 will display WASHING. Steps 12-13 will display SPIN. Step 16 will display DONE.

*On models without bleach/oxi valve, and/or recirculation pump, steps 5, and 7 will be skipped.

**On models without recirculation pump, only drain will activate for the duration of step 8.

For Service Technician Use Only

Faults and Error Codes

Faults marked with "‡" will stop the cycle execution. If no action is taken within 5-10 minutes, the display will turn off.
All faults can be viewed in the 'Fault History' section of Service Mode.

Code	Description	Explanation and Recommended Procedure
F0E2	Oversuds‡	Fault is displayed when suds prevent the basket from spinning up to speed or the pressure sensor detects rising suds level. The main control will flush water in an attempt to clear suds. If the water flush is unable to correct the problem, this may indicate: • Not using HE detergent. • Excessive detergent usage. • Check pressure hose connection from tub to main control. Is hose pinched, kinked, plugged, or leaking air? • Mechanical friction on drive mechanism or basket (items between basket and tub).
F0E3	Overload	Fault is displayed when the main control detects a load size that exceeds the washer's capacity OR basket cannot be turned. This may signify: • Load size exceeds washer capacity. Remove excess laundry, then restart the cycle. • Mechanical friction on drive mechanism or basket (items between basket and tub).
F0E4	Spin Limited by Water Temperature	Fault is displayed when the water temperature is too high to have spin at final speed. Speed will be limited to 500 RPM. • Check water valve function. See Test #2: Valves - for Maytag® Belt Drive models. • Check water valve function. See Test #2: Valves - for Whirlpool® Belt Drive models. • Check water valve function. See Test #2: Valves - for Whirlpool® and Maytag® Direct Drive models.
F0E5	Off Balance Load	Fault is stored when an off balance condition is detected. • Check for weak suspension. Basket should not bounce up and down more than once when pushed. • Items should be distributed evenly when loading.
F0E7	Load Detected When Running Clean Washer Cycle‡	Fault is displayed when clothes are detected in the basket when clean washer cycle is selected. • Remove any load from the basket before running clean washer cycle.
F0E8	Water Ring‡	Fault is displayed when too much residual water is detected. • Run Drain and Spin Cycle.
F0E9	OB Pause‡	Fault is displayed when an off balance condition is detected and after user interventions. • Check for weak suspension. Basket should not bounce up and down more than once when pushed. • Items should be distributed evenly when loading.
F1E1	Main Control (ACU) Fault‡	Fault is displayed indicating a main control (ACU) fault. • See Test #1: Main Control (ACU) - for Maytag® Belt Drive models. • See Test #1: Main Control (ACU) - for Whirlpool® Belt Drive models. • See Test #1: Main Control (ACU) - for Whirlpool® and Maytag® Direct Drive models.
F1E2	Motor Drive Module Over Voltage	Fault is stored when the main control detects a problem in the motor drive. • See Test #3b: Drive System – Motor - for Maytag® Belt Drive models. • See Test #3b: Drive System – Motor - for Whirlpool® Belt Drive models. • See Test #3b: Drive System – Motor - for Whirlpool® and Maytag® Direct Drive models.
F2E1	HMI Stuck Button	Fault is stored indicating that the user interface is detecting that a button is continuously activated. • See Test #4: HMI - for Maytag® Belt Drive models. • See Test #4: HMI - for Whirlpool® Belt Drive models. • See Test #4: HMI - for Whirlpool® and Maytag® Direct Drive models.
F2E2	HMI Disconnected‡	Fault is displayed if the HMI is disconnected from the ACU. • See Test #4: HMI - for Maytag® Belt Drive models. • See Test #4: HMI - for Whirlpool® Belt Drive models. • See Test #4: HMI - for Whirlpool® and Maytag® Direct Drive models.

For Service Technician Use Only

Code	Description	Explanation and Recommended Procedure
F3E2	Pressure System Fault‡	Fault is displayed when the main control detects an out of range or absent pressure signal. • Check pressure hose connection from tub to main control. Is hose pinched, kinked, plugged, or leaking air? • See Test #6: Water Level - for Maytag® Belt Drive models. • See Test #6: Water Level - for Whirlpool® Belt Drive models. • See Test #6: Water Level - for Whirlpool® and Maytag® Direct Drive models.
F3E3	Inlet Water Temperature Fault‡	Fault is stored when the inlet thermistor is detected to be open or shorted. • See Test #5: Temperature Thermistor - for Maytag® Belt Drive models. • See Test #5: Temperature Thermistor - for Whirlpool® Belt Drive models. • See Test #5: Temperature Thermistor - for Whirlpool® and Maytag® Direct Drive models.
F3E5	Mini Bulk System Error	Fault is displayed when the bulk level sensor signal is detected out of range. • Check drawer for detergent. • Run Test #9: Load & Go™ Detergent - for Whirlpool® Belt Drive models. • Run Test #9: Load & Go™ Detergent - for Whirlpool® and Maytag® Direct Drive models.
F5E1	Lid Switch Fault - Lid Is Open‡	Fault is displayed if lid is in locked state, but lid switch is open; control not sensing the strike in the lid lock. • User presses START with lid open. • The main control cannot detect the lid switch opening and closing properly. • See Test #8: Lid Lock - for Maytag® Belt Drive models. • See Test #8: Lid Lock - for Whirlpool® Belt Drive models. • See Test #8: Lid Lock - for Whirlpool® and Maytag® Direct Drive models.
F5E3	Lid Lock Will Not Unlock‡	Fault is displayed when one of the following conditions occurs: • Excessive force on lid is preventing lock bolt from retracting. • Wash media buildup is preventing lock bolt from retracting. • Main control cannot determine if lid lock is in an unlocked state. • See Test #8: Lid Lock - for Maytag® Belt Drive models. • See Test #8: Lid Lock - for Whirlpool® Belt Drive models. • See Test #8: Lid Lock - for Whirlpool® and Maytag® Direct Drive models.
	Lid Lock Will Not Lock‡	Fault is displayed when one of the following conditions occurs: • Check lid lock for obstructions. • See Test #8: Lid Lock - for Maytag® Belt Drive models. • See Test #8: Lid Lock - for Whirlpool® Belt Drive models. • See Test #8: Lid Lock - for Whirlpool® and Maytag® Direct Drive models.
F5E4	Lid Not Opened Between Cycles‡	Fault is displayed when one of the following conditions occurs: • User presses START with lid open. • User presses START after a predetermined number of consecutive washer cycles without opening lid. • The main control cannot detect the lid switch opening and closing properly. • See Test #8: Lid Lock - for Maytag® Belt Drive models. • See Test #8: Lid Lock - for Whirlpool® Belt Drive models. • See Test #8: Lid Lock - for Whirlpool® and Maytag® Direct Drive models.
F6E1	Communication Error: HMI Cannot Hear ACU‡	Fault is displayed when communication between the HMI and the ACU has not been detected. • Check continuity in the HMI harness. • Complete Test #1: Main Control (ACU) and Test: #4 HMI - for Maytag® Belt Drive models. • Complete Test #1: Main Control (ACU) and Test: #4 HMI - for Whirlpool® Belt Drive models. • Complete Test #1: Main Control (ACU) and Test: #4 HMI - for Whirlpool® and Maytag® Direct Drive models.

For Service Technician Use Only

Code	Description	Explanation and Recommended Procedure
F6E3	Communication Error: ACU Cannot Hear MCU‡	Fault is displayed when communication between the ACU and the MCU has not been detected. • Complete Test #1: Main Control (ACU) - for Maytag® Belt Drive models. • Complete Test #1: Main Control (ACU) - for Whirlpool® Belt Drive models. • Complete Test #1: Main Control (ACU) - for Whirlpool® and Maytag® Direct Drive models.
F7E1	Tachometer missing or Wrong Signal‡	Fault is stored when the ACU cannot read the speed or power from the tachometer. • Check connections to the ACU. • Complete Test #1: Main Control (ACU) - for Maytag® Belt Drive models. • Complete Test #1: Main Control (ACU) - for Whirlpool® Belt Drive models. • Complete Test #1: Main Control (ACU) - for Whirlpool® and Maytag® Direct Drive models. • Complete Sensor Feedback Motor Speed Tachometer test.
F7E2	MCI drive failure	• Fault is stored when there is a failure within the motor or ACU hardware. • Complete Test #1: Main Control (ACU) and Test #3b: Drive System - Motor - for Maytag® Belt Drive models. • Complete Test #1: Main Control (ACU) and Test #3b: Drive System - Motor - for Whirlpool® Belt Drive models. • Complete Test #1: Main Control (ACU) and Test #3b: Drive System - Motor - for Whirlpool® and Maytag® Direct Drive models.
F7E3	Basket Engaged During Wash	• Fault is stored when the main control determines the shifter is not engaging the basket for spin or disengaging it for wash. • Check shifter connectors. • Check for clothing or another item wedged between the impeller and the basket that could bind them together. • Check that the shifter slider moves freely. • See Test #3a: Drive System – Shifter - for Maytag® Belt Drive models. • See Test #3a: Drive System – Shifter - for Whirlpool® Belt Drive models. • See Test #3a: Drive System – Shifter - for Whirlpool® and Maytag® Direct Drive models.
F7E4	Basket Re-engagement Failure	
F7E6	Motor Circuit Open	Fault is stored when main control detects one or more of the motor lines is open. • Check motor circuit. • See Test #1: Main Control (ACU), Test #3: Drive System or Test #3b: Drive System – Motor - for Maytag® Belt Drive models. • See Test #1: Main Control (ACU), Test #3: Drive System or Test #3b: Drive System – Motor - for Whirlpool® Belt Drive models. • See Test #1: Main Control (ACU), Test #3: Drive System or Test #3b: Drive System – Motor - for Whirlpool® and Maytag® Direct Drive models.
F7E7	Motor unable to reach target RPM	Fault is stored when motor cannot reach the target RPM. • Check basket for obstructions. • See Test #1: Main Control (ACU) and Test #3b: Drive System – Motor - for Maytag® Belt Drive models. • See Test #1: Main Control (ACU) and Test #3b: Drive System – Motor - for Whirlpool® Belt Drive models. • See Test #1: Main Control (ACU) and Test #3b: Drive System – Motor - for Whirlpool® and Maytag® Direct Drive models.
F7E8	Motor Drive Module Over Temp	Fault is stored when the main control detects a problem in the motor drive. • See Test #3b: Drive System – Motor - for Maytag® Belt Drive models. • See Test #3b: Drive System – Motor - for Whirlpool® Belt Drive models. • See Test #3b: Drive System – Motor - for Whirlpool® and Maytag® Direct Drive models.

For Service Technician Use Only

Code	Description	Explanation and Recommended Procedure
F7E9	Locked Rotor	Fault is stored when the main control determines that the motor is not moving when it is being actively driven. • Mechanical friction on drive mechanism or basket (items between basket and tub). • See Test #3: Drive System or Test #3b: Drive System – Motor - for Maytag® Belt Drive models. • See Test #3: Drive System or Test #3b: Drive System – Motor - for Whirlpool® Belt Drive models. • See Test #3: Drive System or Test #3b: Drive System – Motor - for Whirlpool® and Maytag® Direct Drive models.
F7EA	Motor Phase Lost	Fault is stored when one or more of the three motor phases is lost or under the current threshold. • See Test #1: Main Control (ACU) and Test #3: Drive System - for Maytag® Belt Drive models. • See Test #1: Main Control (ACU) and Test #3: Drive System - for Whirlpool® Belt Drive models. • See Test #1: Main Control (ACU) and Test #3: Drive System - for Whirlpool and Maytag® Direct Drive models.
F8E1	Long Fill‡	Fault is displayed when the water level does not change for a period of time OR water is present but the control does not detect the water level changing. • Is water supply connected and turned on? • Are hose screens plugged? • water siphoning out of the drain hose? • Check for proper drain hose installation. • Low water pressure; fill times longer than 10 minutes. • Is the pressure hose connection from the tub to the main control pinched, kinked, plugged, or leaking air? • See Test #2: Valves and Test #6: Water Level - for Maytag® Belt Drive models. • See Test #2: Valves and Test #6: Water Level - for Whirlpool® Belt Drive models. • See Test #2: Valves and Test #6: Water Level - for Whirlpool® and Maytag® Direct Drive models.
F8E2	Dispenser System Failure	Fault is displayed when bulk pump is on but the current is outside of the thresholds. • See Test #9: Load & Go™ Detergent - for Whirlpool® Belt Drive models. • See Test #9: Load & Go™ Detergent - for Whirlpool® and Maytag® Direct Drive models.
F8E3	Overflow or Flood Condition‡	Fault is displayed when main control senses water level that exceeds washer capacity. • Check pressure hose connection from tub to main control. Is hose pinched, kinked, plugged, or leaking air? • Check for proper drain hose installation. Is water siphoning out of the drain hose? Drain hose must not be more than 4.5" (0.11 m) into the drain pipe. Make sure drain hose is not sealed into drain pipe, and that there is an air gap for ventilation. Ensure that drain height is between 39" (0.99 m) and 8'(2.4 m) above the floor. • May signify problem with water inlet valves. • Pressure transducer fault on main control. • See Test #2: Valves and Test #6: Water Level - for Maytag® Belt Drive models. • See Test #2: Valves and Test #6: Water Level - for Whirlpool® Belt Drive models. • See Test #2: Valves and Test #6: Water Level - for Whirlpool® and Maytag® Direct Drive models.
F8E6	Water Hazard‡	Fault is displayed when main control senses water in the tub and the lid has been left open for more than 10 minutes. • Check pressure hose connection from tub to main control. Is hose pinched, kinked, plugged, or leaking air? • Check for proper drain hose installation. Is water siphoning out of the drain hose? Drain hose must not be more than 4.5" (0.11 m) into the drain pipe. Make sure drain hose is not sealed into drain pipe, and that there is an air gap for ventilation. Ensure that drain height is between 39" (0.99 m) and 8' (2.4 m) above the floor. • May signify problem with water inlet valves. • Pressure transducer fault on main control. • May signify problem with lid lock. • See Test #2: Valves , Test #6: Water Level, or Test #8: Lid Lock - for Maytag® Belt Drive models. • See Test #2: Valves , Test #6: Water Level, or Test #8: Lid Lock - for Whirlpool® Belt Drive models. • See Test #2: Valves , Test #6: Water Level, or Test #8: Lid Lock - for Whirlpool® and Maytag® Direct Drive models.

For Service Technician Use Only

Code	Description	Explanation and Recommended Procedure
F9E1	Drain Pump System Problem - Long Drain‡	Fault is displayed when the water level does not change after the drain pump is on. • Is the drain hose or the drain pump clogged? • Is the drain hose height greater than 8' (2.4 m)? • Is the pressure hose connection from the tub to the main control pinched, kinked, plugged, or leaking air? • Too much detergent. • Is the pump running? If not- • see Test #7: Drain Pump - for Maytag® Belt Drive models. • See Test #7: Drain Pump - for Whirlpool® Belt Drive models. • See Test #7: Drain Pump - for Maytag® and Whirlpool® Direct Drive models.

For Service Technician Use Only

Troubleshooting Guide

NOTE: Always check for Faults and Error Codes first. Some tests will require accessing components.
See figures for Component Location. For detailed troubleshooting procedures, refer to Troubleshooting Tests.

Problem	Possible Cause	Checks and Tests
Won't Power Up • No operation • No keypad response • No LEDs or display	No power to washer. Connection problem between main control and HMI.	Check power at outlet, check circuit breakers, fuses, or junction box connections.
	Connection problem between AC plug and main control.	Check the AC power cord for continuity.
	User Interface problem.	Check connections and continuity between main control and HMI. See Test #4: HMI - for Maytag® Belt Drive models. See Test #4: HMI - for Whirlpool® Belt Drive models. See Test #4: HMI - for Whirlpool® and Maytag® Direct Drive models.
	Main Control problem.	See Test #1: Main Control (ACU) - for Maytag® Belt Drive models. See Test #1: Main Control (ACU) - for Whirlpool® Belt Drive models. See Test #1: Main Control (ACU) - for Whirlpool® and Maytag® Direct Drive models.
Won't Start Cycle No response when START is pressed	Lid lock mechanism not functioning.	**1.** Lid not closed due to interference. **2.** Lock not closed due to interference. **3.** See Test #8: Lid Lock - for Maytag® Belt Drive models. See Test #8: Lid Lock - for Whirlpool® Belt Drive models. See Test #8: Lid Lock - for Whirlpool® and Maytag® Direct Drive models.
	Connection problem between main control and HMI.	Check connections and continuity between main control and HMI.
	User Interface problem.	See Test #4: HMI - for Maytag® Belt Drive models. See Test #4: HMI - for Whirlpool® Belt Drive models. See Test #4: HMI - for Whirlpool® and Maytag® Direct Drive models.
	Main Control problem.	See Test #1: Main Control (ACU) - for Maytag® Belt Drive models. See Test #1: Main Control (ACU) - for Whirlpool® Belt Drive models. See Test #1: Main Control (ACU) - for Whirlpool® and Maytag® Direct Drive models.
HMI Won't Accept Selections	Connection problem between main control and HMI.	Check connections and continuity between main control and HMI.
	User Interface problem.	See Test #4: HMI - for Maytag® Belt Drive models. See Test #4: HMI - for Whirlpool® Belt Drive models. See Test #4: HMI - for Whirlpool® and Maytag® Direct Drive models.
	Main Control problem.	See Test #1: Main Control (ACU) - for Maytag® Belt Drive models. See Test #1: Main Control (ACU) - for Whirlpool® Belt Drive models. See Test #1: Main Control (ACU) - for Whirlpool® and Maytag® Direct Drive models.
Won't Fill	No water supplied to washer.	**1.** Check water connections to washer. **2.** Verify that hot and cold water supply is on.
	Plugged filter/screen.	Check for plugged filter or screen in the water valve or hoses.
	Drain hose installation.	Check for proper drain hose installation.
	Valve problem.	See Test #2: Valves - for Maytag® Belt Drive models. See Test #2: Valves - for Whirlpool® Belt Drive models. See Test #2: Valves - for Whirlpool® and Maytag® Direct Drive models.
	Main Control problem.	See Test #1: Main Control (ACU) - for Maytag® Belt Drive models. See Test #1: Main Control (ACU) - for Whirlpool® Belt Drive models. See Test #1: Main Control (ACU) - for Whirlpool® and Maytag® Direct Drive models.

For Service Technician Use Only

Problem	Possible Cause	Checks and Tests
Overfills	Pressure hose.	See Test #6: Water Level - for Maytag® Belt Drive models. See Test #6: Water Level - for Whirlpool® Belt Drive models. See Test #6: Water Level - for Whirlpool® and Maytag® Direct Drive models.
	Valve problem.	See Test #2: Valves - for Maytag® Belt Drive models. See Test #2: Valves - for Whirlpool® Belt Drive models. See Test #2: Valves - for Whirlpool® and Maytag® Direct Drive models.
	Washer requires calibration.	Perform Service/DLMS Calibration.
	Pressure transducer on main control.	See Test #1: Main Control (ACU) - for Maytag® Belt Drive models. See Test #1: Main Control (ACU) - for Whirlpool® Belt Drive models. See Test #1: Main Control (ACU) - for Whirlpool® and Maytag® Direct Drive models.
Won't Dispense Fabric Softener Or Oxi (Oxi not on all models)	No water supplied to washer.	**1.** Check water connections to washer. **2.** Verify that hot and cold water supply is on.
	Obstruction in dispenser.	Clean obstruction from dispenser.
	Valve problem.	See Test #2: Valves - for Maytag® Belt Drive models. See Test #2: Valves - for Whirlpool® Belt Drive models. See Test #2: Valves - for Whirlpool® and Maytag® Direct Drive models.
	Main Control problem.	See Test #1: Main Control (ACU) - for Maytag® Belt Drive models. See Test #1: Main Control (ACU) - for Whirlpool® Belt Drive models. See Test #1: Main Control (ACU) - for Whirlpool® and Maytag® Direct Drive models.
Incorrect Water Temperature	Water hose installation.	Make sure inlet hoses are connected properly.
	Temperature thermistor.	See Test #5: Temperature Thermistor - for Maytag® Belt Drive models. See Test #5: Temperature Thermistor - for Whirlpool® Belt Drive models. See Test #5: Temperature Thermistor - for Whirlpool® and Maytag® Direct Drive models.
	Valve problem.	See Test #2: Valves - for Maytag® Belt Drive models. See Test #2: Valves - for Whirlpool® Belt Drive models. See Test #2: Valves - for Whirlpool® and Maytag® Direct Drive models.
	Main Control problem.	See Test #1: Main Control (ACU) - for Maytag® Belt Drive models. See Test #1: Main Control (ACU) - for Whirlpool® Belt Drive models. See Test #1: Main Control (ACU) - for Whirlpool® and Maytag® Direct Drive models.

For Service Technician Use Only

Problem	Possible Cause	Checks and Tests
Won't Agitate	Water covering the impeller?	See Test #6: Water Level - for Maytag® Belt Drive models. See Test #6: Water Level - for Whirlpool® Belt Drive models. See Test #6: Water Level - for Whirlpool® and Maytag® Direct Drive models.
	Is lid lock showing open during the cycle?	See Test #8: Lid Lock - for Maytag® Belt Drive models. See Test #8: Lid Lock - for Whirlpool® Belt Drive models. See Test #8: Lid Lock - for Whirlpool® and Maytag® Direct Drive models.
	Harness connections.	Check harness connections between main control and drive system.
	Shifter problem.	See Test #3a: Drive System – Shifter - for Maytag® Belt Drive models. See Test #3a: Drive System – Shifter - for Whirlpool® Belt Drive models. See Test #3a: Drive System – Shifter - for Whirlpool® and Maytag® Direct Drive models.
	Motor problem.	See Test #3b: Drive System – Motor - for Maytag® Belt Drive models. See Test #3b: Drive System – Motor - for Whirlpool® Belt Drive models. See Test #3b: Drive System – Motor - for Whirlpool® and Maytag® Direct Drive models.
	Main Control problem.	See Test #1: Main Control (ACU) - for Maytag® Belt Drive models. See Test #1: Main Control (ACU) - for Whirlpool® Belt Drive models. See Test #1: Main Control (ACU) - for Whirlpool® and Maytag® Direct Drive models.
Won't Spin	Is lid lock showing open during the cycle?	See Test #8: Lid Lock - for Maytag® Belt Drive models. See Test #8: Lid Lock - for Whirlpool® Belt Drive models. See Test #8: Lid Lock - for Whirlpool® and Maytag® Direct Drive models.
	Harness connections.	Check harness connections between main control and drive system.
	Shifter problem.	See Test #3a: Drive System – Shifter - for Maytag® Belt Drive models. See Test #3a: Drive System – Shifter - for Whirlpool® Belt Drive models. See Test #3a: Drive System – Shifter - for Whirlpool® and Maytag® Direct Drive models.
	Motor problem.	See Test #3b: Drive System – Motor - for Maytag® Belt Drive models. See Test #3b: Drive System – Motor - for Whirlpool® Belt Drive models. See Test #3b: Drive System – Motor - for Whirlpool® and Maytag® Direct Drive models.
	Main Control problem.	See Test #1: Main Control (ACU) - for Maytag® Belt Drive models. See Test #1: Main Control (ACU) - for Whirlpool® Belt Drive models. See Test #1: Main Control (ACU) - for Whirlpool® and Maytag® Direct Drive models.

For Service Technician Use Only

Problem	Possible Cause	Checks and Tests
Won't Drain	Drain hose installation.	Check for proper drain hose installation. Make sure it is not inserted more than 4.5" (0.11 m). Make sure drain hose is not sealed into drain pipe, and that there is an air gap for ventilation.
	Standpipe position.	Ensure drain height is between 39" (0.99 m) and 8' (2.4 m) above the floor.
	Plugged drain hose.	Check drain hose for obstructions.
	Obstructions to drain pump.	Check tub sump under impeller plate and basket for obstructions.
	Harness connections.	Check harness connections between main control and drain pump.
	Drain pump.	See Test #7: Drain Pump - for Maytag® Belt Drive models. See Test #7: Drain Pump - for Whirlpool® Belt Drive models. See Test #7: Drain Pump - for Maytag® and Whirlpool® Direct Drive models.
	Main Control problem.	See Test #1: Main Control (ACU) - for Maytag® Belt Drive models. See Test #1: Main Control (ACU) - for Whirlpool® Belt Drive models. See Test #1: Main Control (ACU) - for Whirlpool® and Maytag® Direct Drive models.
Cycle Time Longer Than Expected	Oversuds.	**1.** Verify use of HE detergent. **2.** Excessive detergent usage.
	Off balance.	**1.** Load is off balance. **2.** Balance ring water leak.
	Drain hose installation.	Check for proper drain hose installation. Make sure it is not inserted more than 4.5" (0.11 m). Make sure drain hose is not sealed into drain pipe, and that there is an air gap for ventilation.
	Standpipe position.	Ensure drain height is between 39" (0.99 m) and 8' (2.4 m) above the floor.
	Draining slowly.	Check for pump or drain hose obstructions.
	Water pressure drop.	Results in longer fill time.
	Friction or drag on drive.	Check motor and bearings; check for items between tub and basket.
	Weak suspension.	Basket should not bounce up and down more than once when pushed.
No Water when Activating Water Faucet (On Some Models) **IMPORTANT:** The water faucet can only be activated when the lid is open.	No water supplied to washer. Obstruction in dispenser. Faucet switch problem. Valve switch problem. Main Control problem.	**1.** Check water connections to washer. **2.** Verify that hot and cold water supply is on. Clean obstruction from dispenser. See Test #10: Faucet Switch - for Whirlpool® Belt Drive Models. See Test #10: Faucet Switch - for Whirlpool® and Maytag® Belt Drive Models. See Test #2: Valves - for Maytag® Belt Drive models. See Test #2: Valves - for Whirlpool® Belt Drive models. See Test #2: Valves - for Whirlpool® and Maytag® Direct Drive models. See Test #1: Main Control (ACU) - for Maytag® Belt Drive models. See Test #1: Main Control (ACU) - for Whirlpool® Belt Drive models. See Test #1: Main Control (ACU) - for Whirlpool® and Maytag® Direct Drive models.

For Service Technician Use Only

Problem	Possible Cause	Checks and Tests
Poor Wash Performance See Quick Reference Guide	Oversuds.	**1.** Verify use of HE detergent. **2.** **Excessive detergent usage.**
	Load is tangling.	**1.** Washer not loaded properly. **2.** Perform DLMS Calibration.
	Incorrect water level.	**1.** Perform Service/DLMS Calibration. **2.** See Test #2: Valves - for Maytag® Belt Drive models. See Test #2: Valves - for Whirlpool® Belt Drive models. See Test #2: Valves - for Whirlpool® and Maytag® Direct Drive models. **3.** See Test #6: Water Level - for Maytag® Belt Drive models. See Test #6: Water Level - for Whirlpool® Belt Drive models. See Test #6: Water Level - for Whirlpool® and Maytag® Direct Drive models.
	Clothes wet after cycle is complete (not water saturated, but very damp)	**1.** Overloaded washer. **2.** Oversuds (see above). **3.** Items caught in tub sump. **4.** Weak suspension. **5.** Shifter not moving into position. **6.** Cold/Rinse water > 105°F (40.5°C). **7.** See Test #7: Drain Pump - for Maytag® Belt Drive models. See Test #7: Drain Pump - for Whirlpool® Belt Drive models. See Test #7: Drain Pump - for Maytag® and Whirlpool® Direct Drive models. **8.** See Test #3b: Drive System – Motor - for Maytag® Belt Drive models. See Test #3b: Drive System – Motor - for Whirlpool® Belt Drive models. See Test #3b: Drive System – Motor - for Whirlpool® and Maytag® Direct Drive models.
	Load not rinsed.	**1.** Check proper water supply. **2.** Not using HE detergent. **3.** Washer not loaded properly. **4.** Shifter not moving into spin position. **5.** See Test #2: Valves - for Maytag® Belt Drive models. See Test #2: Valves - for Whirlpool® Belt Drive models. See Test #2: Valves - for Whirlpool® and Maytag® Direct Drive models. **6.** See Test #3b: Drive System – Motor - for Maytag® Belt Drive models. See Test #3b: Drive System – Motor - for Whirlpool® Belt Drive models. See Test #3b: Drive System – Motor - for Whirlpool® and Maytag® Direct Drive models.
	Not cleaning clothes.	**1.** Washer not loaded properly. **2.** Not using HE detergent. **3.** Not using correct cycle. **4.** Shifter not moving into position. **5.** See Test #3b: Drive System – Motor - for Maytag® Belt Drive models. See Test #3b: Drive System – Motor - for Whirlpool® Belt Drive models. See Test #3b: Drive System – Motor - for Whirlpool® and Maytag® Direct Drive models.
	Fabric damage.	**1.** Washer overloaded. **2.** Bleach added incorrectly. **3.** Sharp items in tub.
	Wrong option or cycle selection.	Refer customer to “Quick Reference Guide.”

For Service Technician Use Only

Troubleshooting Pinched Wires in the Harness

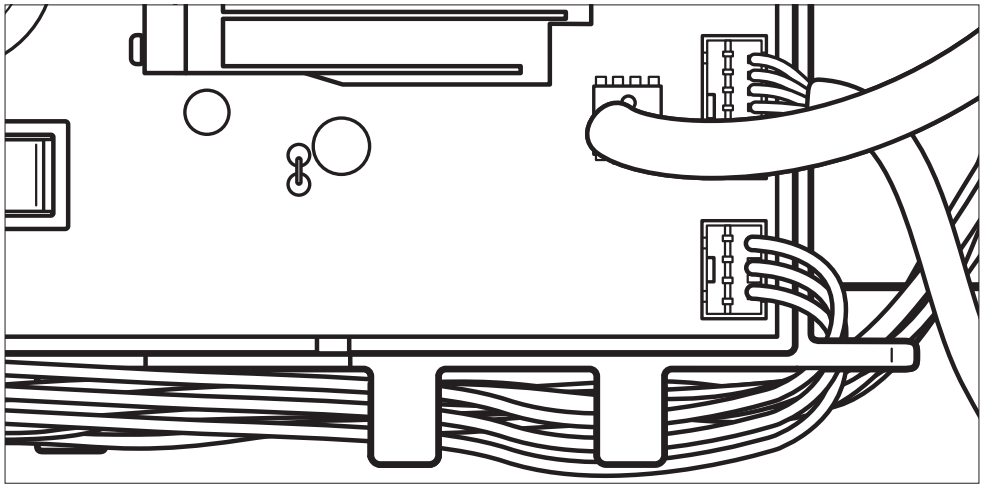

Figure 5 - Troubleshooting pinched wires in Harness

IMPORTANT: Verify that the harness is routed under the guides in the Main Control (ACU) as shown in above (Figure 5) before re-installing the console.

For Service Technician Use Only

Notes

Section 3: Component Testing

This section provides the wiring diagram, component testing, and component location for the "Whirlpool® and Maytag® 4.7/5.3 cu ft Top Load Washer."

- Safety
- Wiring Diagram
- Main Control (ACU) Board, Connectors and Pinouts
- Troubleshooting Tests
- Troubleshooting Guide for Connected Washer
- Component Location

For Service Technician Use Only
Safety

⚠ DANGER

Electrical Shock Hazard

Only authorized technicians should perform diagnostic voltage measurements.

After performing voltage measurements, disconnect power before servicing.

Failure to follow these instructions can result in death or electrical shock.

⚠ WARNING

Electrical Shock Hazard

Disconnect power before servicing.

Replace all parts and panels before operating.

Failure to do so can result in death or electrical shock.

Voltage Measurement Safety Information

When performing live voltage measurements, you must do the following:

- **Verify the controls are in the off position so that the appliance does not start when energized.**
- **Allow enough space to perform the voltage measurements without obstructions.**
- **Keep other people a safe distance away from the appliance to prevent potential injury.**
- **Always use the proper testing equipment.**
- **After voltage measurements, always disconnect power before servicing.**

IMPORTANT: Electrostatic Discharge (ESD) Sensitive Electronics

ESD problems are present everywhere. Most people begin to feel an ESD discharge at approximately 3000 V. It takes as little as 10 V to destroy, damage, or weaken the main control assembly. The new main control assembly may appear to work well after repair is finished, but a malfunction may occur at a later date due to ESD stress.

- Use an anti-static wrist strap. Connect wrist strap to green earth connection point or unpainted metal in the appliance.

  – OR –

  Touch your finger repeatedly to a green ground connection point or unpainted metal in the appliance.
- Before removing the part from its package, touch the anti-static bag to a green ground connection point or unpainted metal in the appliance.
- Avoid touching electronic parts or terminal contacts; handle electronic control assembly by edges only.
- When repackaging main control assembly in anti-static bag, observe above instructions.

IMPORTANT SAFETY NOTICE — “For Technicians only”

This service data sheet is intended for use by persons having electrical, electronic, and mechanical experience and knowledge at a level generally considered acceptable in the appliance repair trade. Any attempt to repair a major appliance may result in personal injury and property damage. The manufacturer or seller cannot be responsible, nor assume any liability for injury or damage of any kind arising from the use of this data sheet.

For Service Technician Use Only
Wiring Diagram

For Maytag® Belt Drive Models

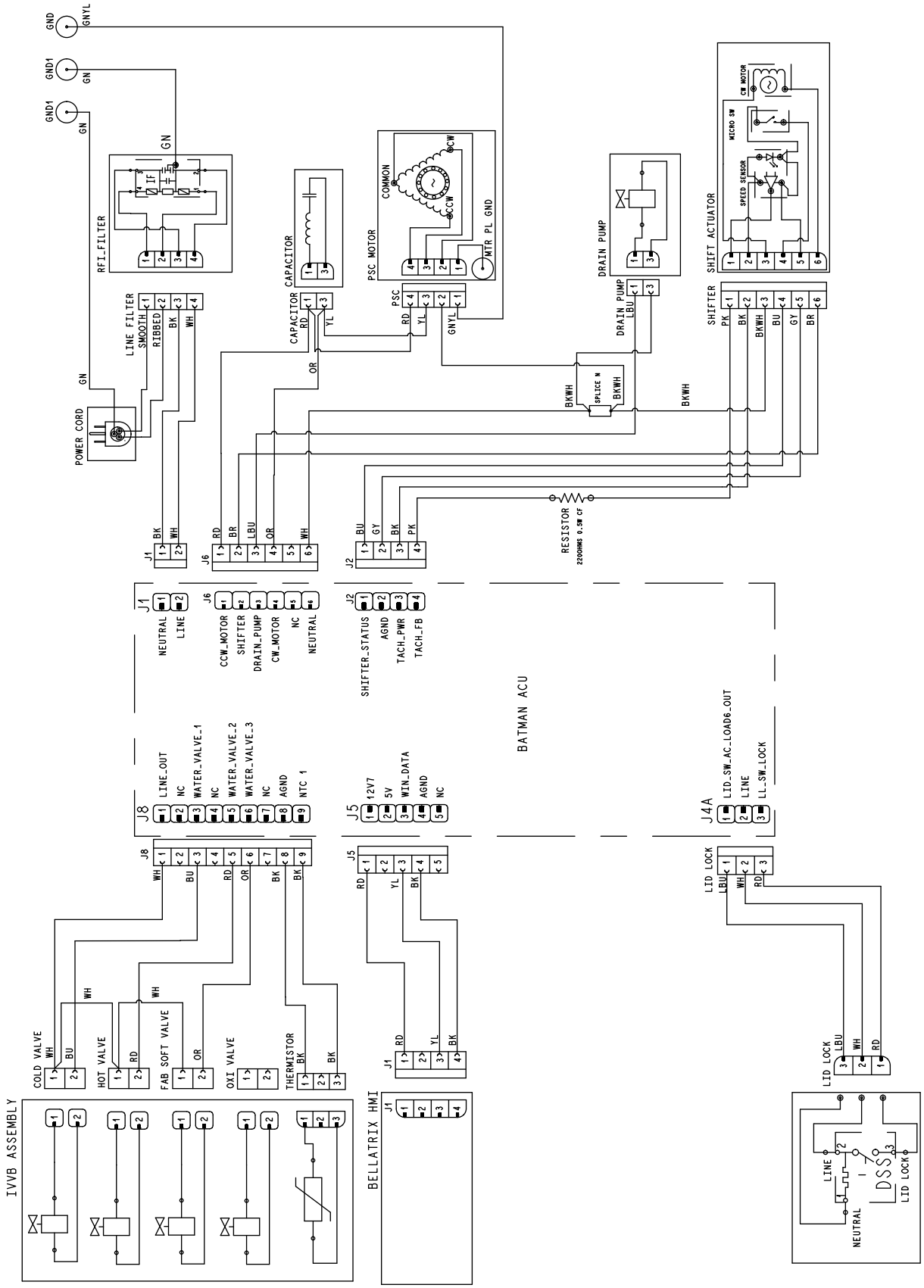

For Service Technician Use Only

For Whirlpool® Belt Drive Models

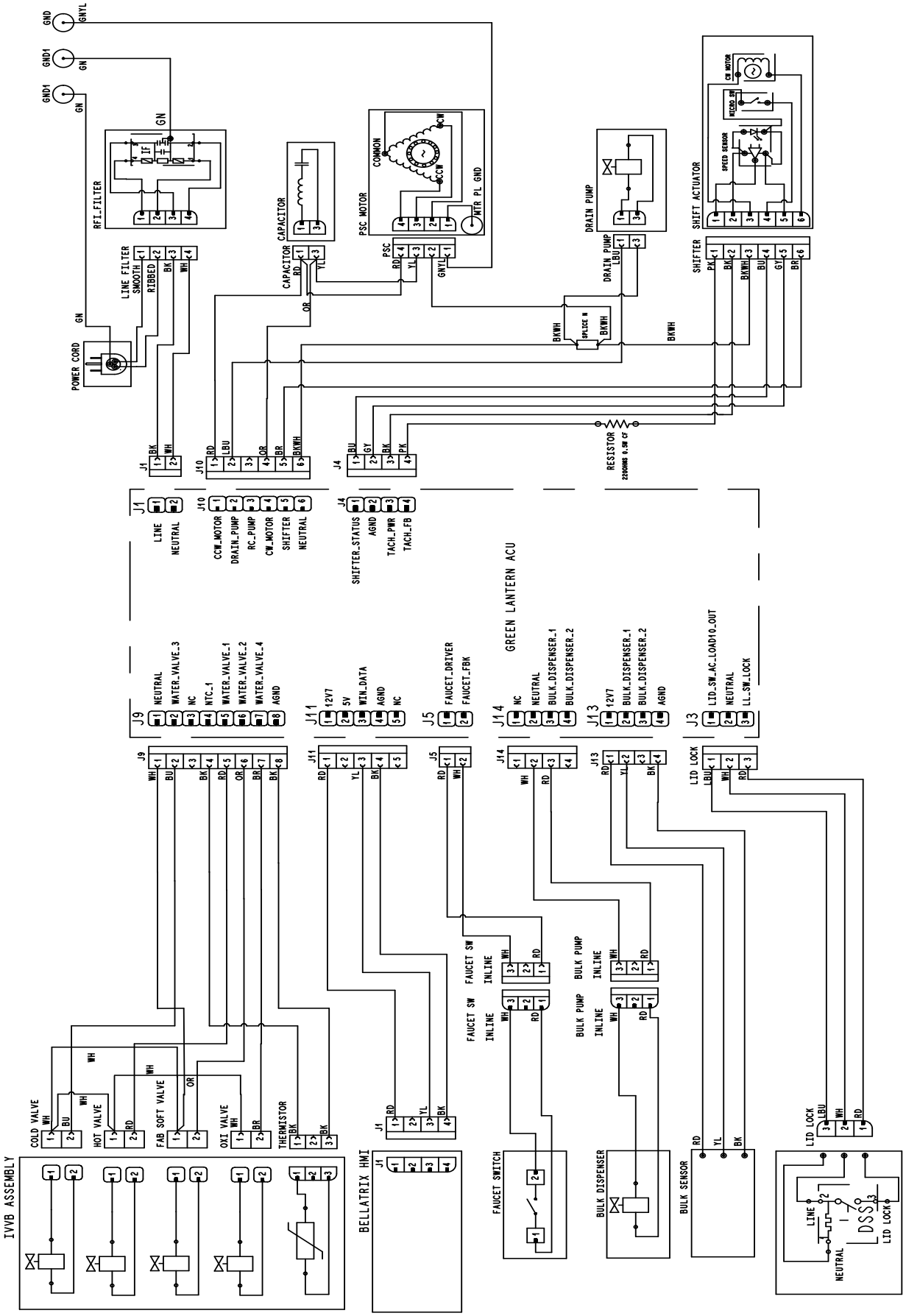

For Service Technician Use Only

For Whirlpool® and Maytag® Direct Drive Models

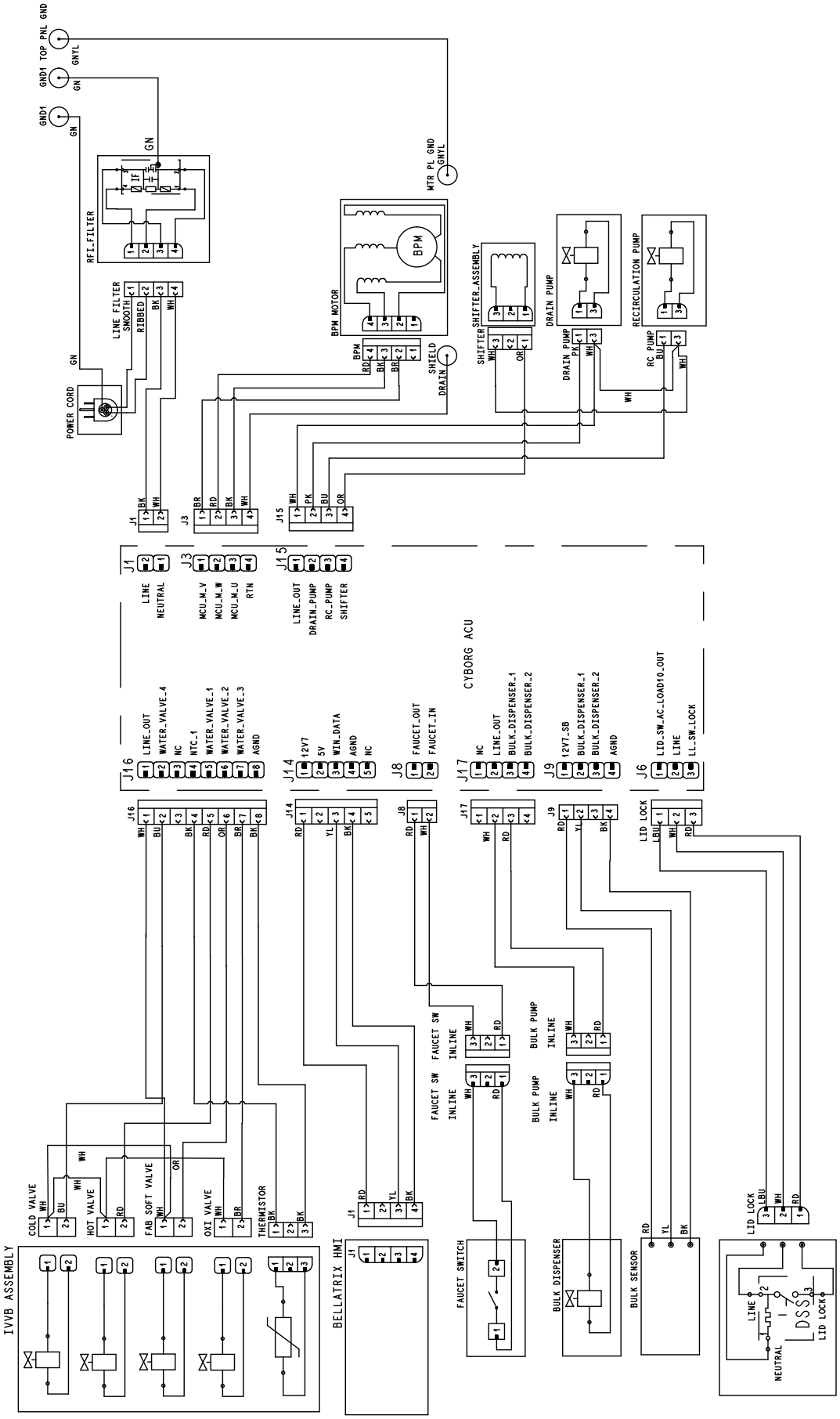

For Service Technician Use Only
Main Control (ACU) Connectors and Pinouts

For Maytag® Belt Drive Models

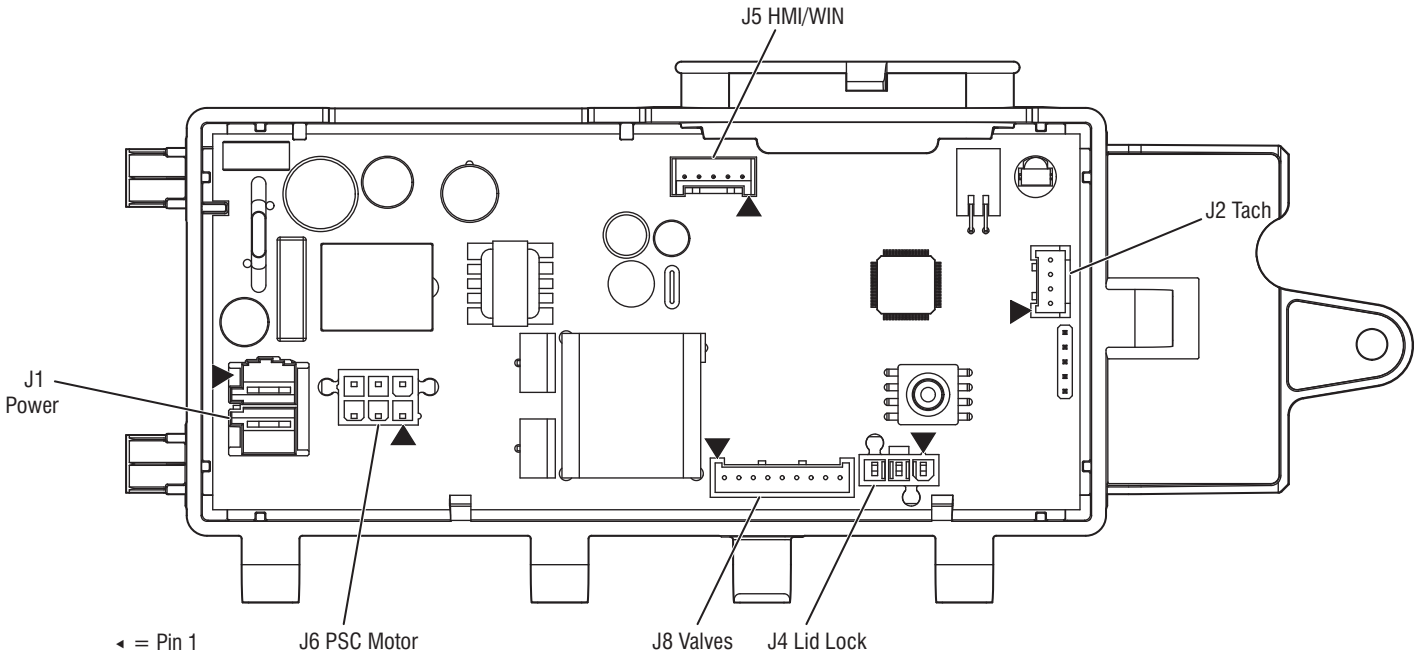

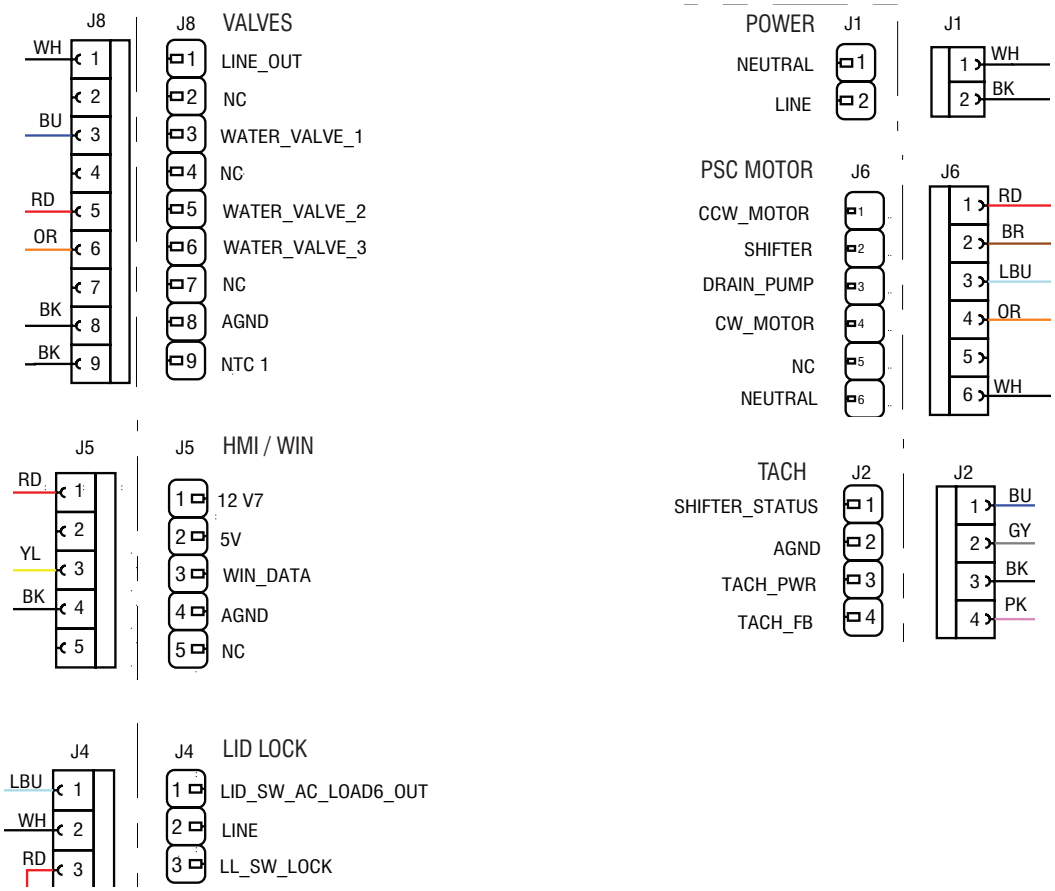

Figure 1 - Main Control (ACU) with Connectors and Pinouts

For Service Technician Use Only

For Whirlpool® Belt Drive Models

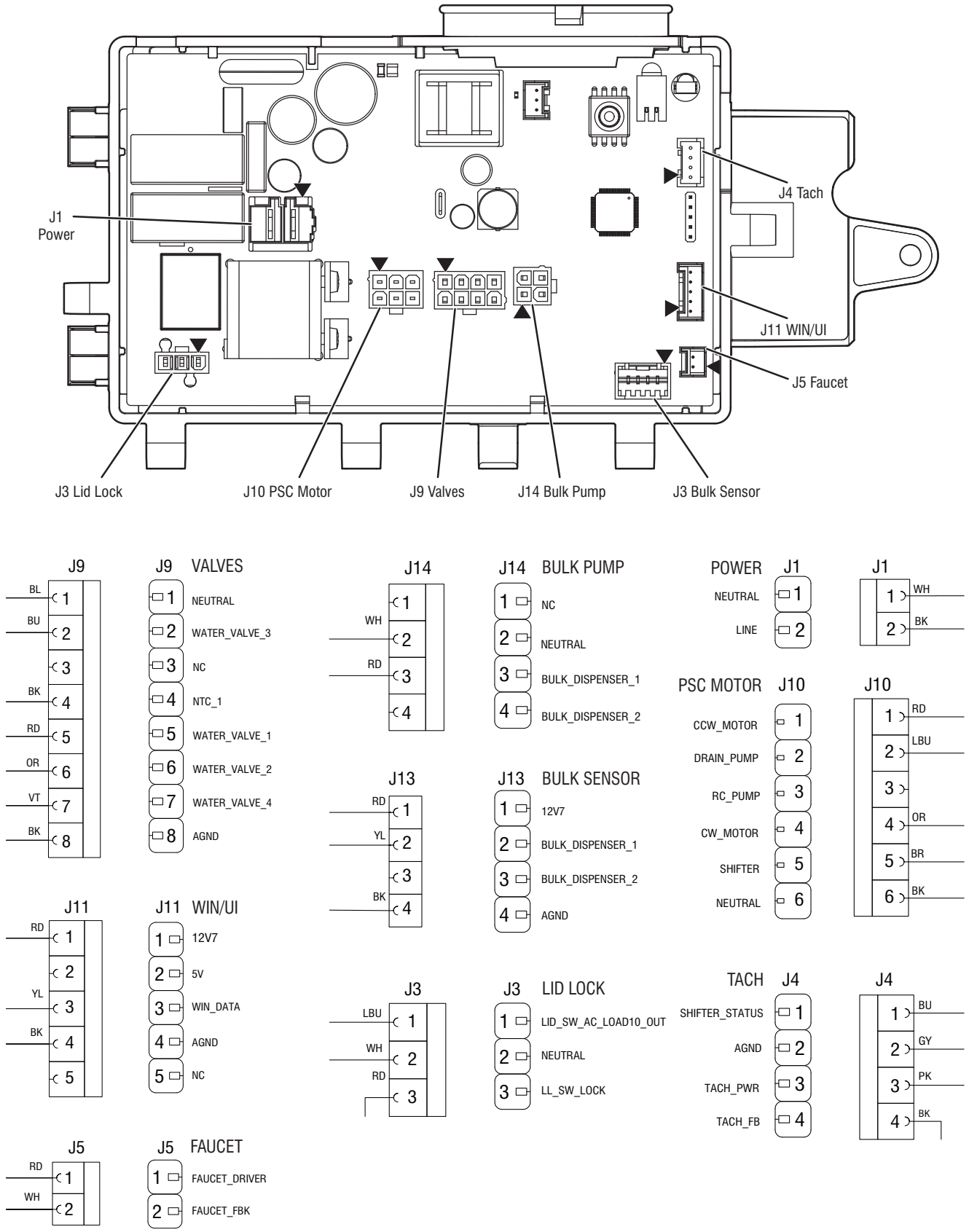

Figure 2 - Main Control (ACU) with Connectors and Pinouts

For Service Technician Use Only

For Whirlpool® and Maytag® Direct Drive Models

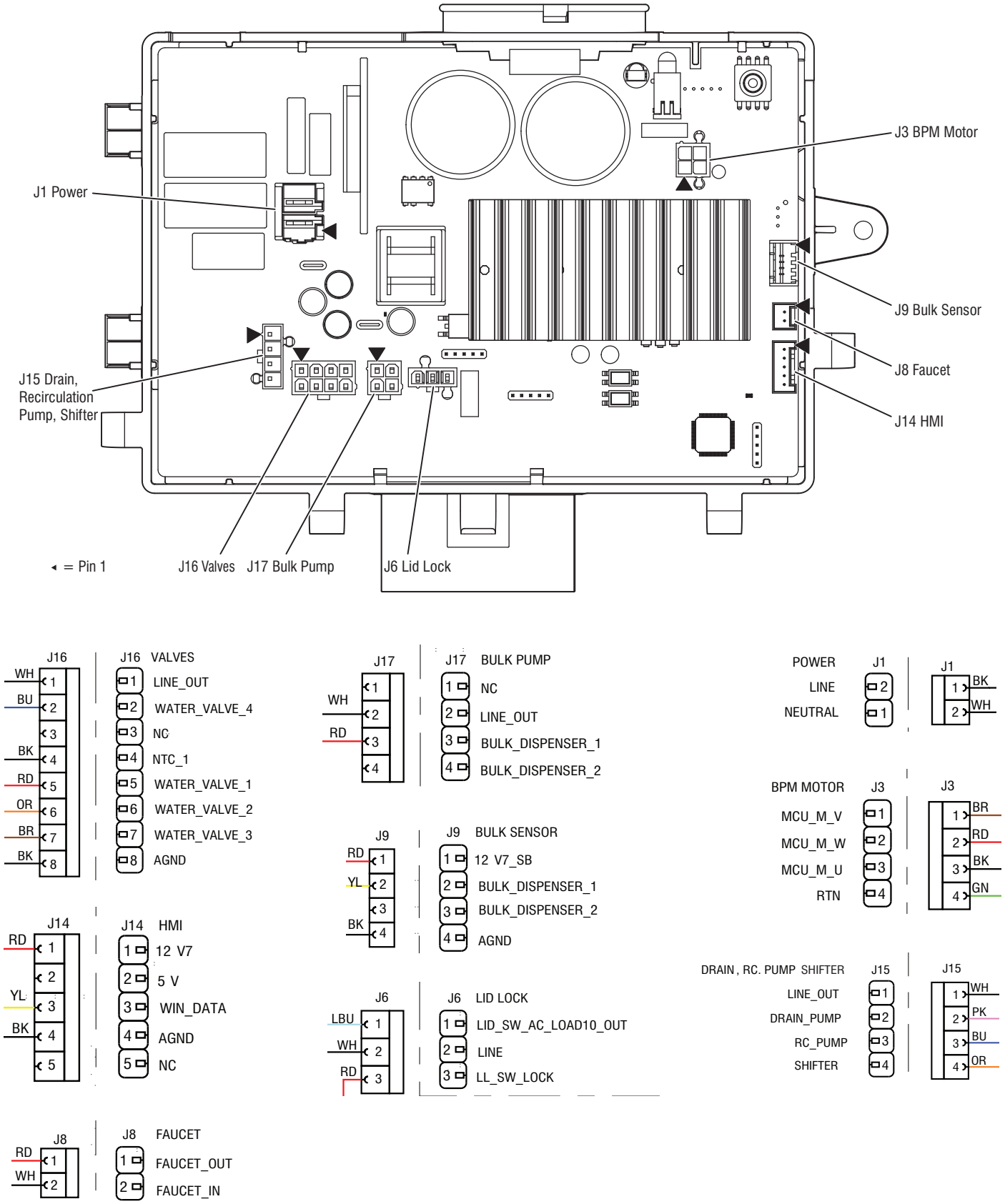

Figure 3 - Main Control (ACU) with Connectors and Pinouts

For Service Technician Use Only Troubleshooting Tests

For Maytag® Belt Drive Models

Test #1: Main Control (ACU)

This test checks for incoming and outgoing power to and from main control. This test assumes that proper voltage is present at the outlet.

1. Unplug washer or disconnect power.
2. Remove console to access main control.
3. Verify that ALL connectors are inserted all the way into the main control.
4. With a voltmeter set to AC, connect black probe to J1-1 (Neutral) and red probe to J1-2 (Line). Plug in washer or reconnect power.
   - If 120 VAC is present, go to step 5.
   - If 120 VAC is not present, check the AC power cord for continuity. See Figure 1-Main Control (ACU) from section Component Location.
5. Is the "Diagnostic LED" flashing or continuously "ON" or "OFF"? See Figure 1-Diagnostic LED of Maytag® Belt Drive Models.
   - Flashing: (+5 VDC present and micro operating) proceed to HMI Test.
   - ON: (+5 VDC but micro failure) continue to step 8.
   - OFF: (+5 VDC missing or micro failure) continue to step 6.
6. Check if console HMI is affecting the main control DC supply.
   a. Unplug washer or disconnect power.
   b. Remove connector J5 from main control.
   c. Plug in washer or reconnect power.
7. Perform voltage checks inside header J5 on the board-do not short pins together.
   a. With a voltmeter set to DC, connect black probe to J5-4 (Circuit Gnd) and red probe to J5-1 (+12 VDC).
      - If DC voltage is not present, go to step 8.
      - If the DC voltage is present, but the diagnostic LED is not flashing, continue to step 8.
8. Main Control has malfunctioned.
   a. Unplug washer or disconnect power.
   b. Replace the main control.
   c. Reassemble all parts and panels.
   d. Plug in washer or reconnect power. Perform Service Diagnostic Cycle to verify repair.

Test #2: Valves

This test checks the electrical connections to the valves, and the valves themselves.

1. Check the relays and electrical connections to the valves by performing the Cold, Hot, Oxi (not on all models), and Fabric Softener Service Test under Component Activation. Each test activates and deactivates the selected valve. The following steps assume one (or more) valve(s) did not turn on.
2. For the valve(s) in question check the individual solenoid valves.
   a. Unplug washer or disconnect power.
   b. Remove console to access main control.
   c. Remove connector J8 from main control. Refer to Figure 1- Main Control (ACU) from section Component Location.
   d. Check harness continuity and connection to solenoid valves.
3. Check resistance of the valve coils across the following J8 connector pinouts:

Valve	Pinout
Fabric Softener	J8, 1 and 6
Hot	J8, 1 and 5
Cold	J8, 1 and 3

Resistance should be 890 - 1090 Ω.

- If resistance readings are tens of ohms outside of range, replace the valve assembly.
- If resistance readings are within range, replace main control and perform Service Diagnostics to verify repair.

Test #3: Drive System

1. Enter Service Mode and view Fault Codes. If F7E1, F7E3, F7E4, F7E6 or F7E7 faults are shown then there is likely a motor or shifter related issue. Take note of the faults and clear the faults.
2. Once the error codes are cleared, enter Component Activation Mode and run the Slow Agitation test; if the motor runs after 15-20 seconds, there is not a problem with the motor, control, or motor wiring harness connections.
3. Next, within Component Activation Mode, run the Spin Low Speed cycle. If the motor hums briefly and then shuts down, go to Fault Code display Mode and check for fault codes.
4. After running agitation and spin test, check for fault codes.

Test #3a: Drive System – Shifter

This test checks connections, shifter coil, and harness.

NOTE: Lid must be closed and locked for the motor to agitate or spin.

IMPORTANT: Drain water from tub before accessing bottom of washer.

Functional Check:

1. Check the shifter and electrical connections by performing both the Spin and Agitate tests under Component Activation Mode. The following steps assume that this step was unsuccessful.
2. Unplug washer or disconnect power.
3. The motor and shifter should be able to be turned independently of each other. If they are locked together, there is a shifter slider issue. Proceed to step 11.
   - If basket and impeller turn freely, go to step 4.
   - If basket and/or impeller do not turn freely, determine what is causing the mechanical friction or lockup.
4. Remove console to access main control.
5. Visually check that the J2 and J6 connectors are inserted all the way into the main control.
   - If visual checks pass, go to step 6.
   - If connector is not inserted properly, reconnect J2 and J6 and repeat step 1.

For Service Technician Use Only

Shifter Motor:

NOTE: Before starting the electrical check, verify that the cam on the splutch is moving freely and not binding.

6. Remove connector J6 from main control. With an ohmmeter, verify resistance of the shifter motor across the following J6 connector pinouts:
Resistance should be 2 kΩ to 3.5 kΩ.

Component	J6 Connector Pinout
Shifter	J6, 2 and 6

- If values are correct, reconnect J6 and proceed to step 7.
- If values are open or out of range, go to step 12.

7. With a voltmeter set to AC, connect the black probe to J6-2 and red probe to J6-6. Plug in washer or reconnect power. Activate shifter motor by switching the shifter output ON and OFF. Energize outputs using Component Activation Mode.
NOTE: Motor must be stopped to toggle the shifter. Alternately, Spin and Agitate can be commanded to switch shifter in Component Activation Mode.

IMPORTANT: Lid must be closed to run the Spin and Agitate tests.

- If 120 VAC is present, go to step 8.
- If 120 VAC is not present, go to step 11.

Shifter Switch:

8. With a voltmeter set to DC, connect the black probe to J2-2 (Circuit Gnd) and red probe to J2-1 (Shifter Switch). In Component Activation Mode, switch between Spin and Agitate modes. Voltage should toggle between 0 and +5 VDC.
SPIN = +5 VDC
AGITATE = 0 VDC

- If voltage corresponds to setting, go to step 9.
- If voltage does not switch, go to step 11.

Optical Sensor:

9. With a voltmeter set to DC, connect the black probe to J2-2 (Circuit Gnd) and a red probe to J2-3 (Tach Pwr).
- If +12 VDC is present, go to step 10.
- If +12 VDC is not present, go to step 16.

10. Activate Motor Speed Tachometer from Sensor Feedback. Slowly turn the basket by hand.
NOTE: Spinning the basket too fast will result in a safety fault for the lid lock. The screen will display the basket speed in RPM.
- If the tachometer is not verified, go to step 11.
- If the tachometer is verified, go to step 16.

11. Unplug washer or disconnect power.

12. Tilt washer back to access the bottom of the washer and the drive motor area.

13. Visually check the electrical connections to the shifter.
- If visual check passes, go to step 14.
- If connections are loose, reconnect the electrical connections and repeat step 1.

14. With an ohmmeter, check the harness for continuity between the shifter and main control using the pinouts in the following chart.
- If there is continuity, go to step 15.

If there is no continuity, replace the lower washer harness and repeat step 1.

Shifter to Main Control and Drain Pump
Shifter Pin 1 to Main Control J2-4
Shifter Pin 2 to Main Control J2-3
Shifter Pin 3 to Main Control J6-6
Shifter Pin 4 to Main Control J2-1
Shifter Pin 5 to Main Control J2-2
Shifter Pin 6 to Main Control J6-2

15. Replace the shifter assembly.
- **a.** Unplug washer or disconnect power.
- **b.** Replace shifter assembly.
- **c.** Reassemble all parts and panels.
- **d.** Plug in washer or reconnect power. Calibrate washer and perform Automatic Test to verify repair.

16. If the preceding steps did not correct the problem, replace the main control.
- **a.** Unplug washer or disconnect power.
- **b.** Replace the main control.
- **c.** Reassemble all parts and panels.
- **d.** Plug in washer or reconnect power. Calibrate washer and perform Automatic Test to verify repair.

Test #3b: Drive System – Motor

This test checks the motor, motor windings, wiring, and start capacitor.

IMPORTANT: Drain water from tub before accessing bottom of washer.

1. Check the motor and electrical connections by performing the Motor Slow or Fast Agitate test under Component Activation. Verify that the basket is spinning in a clockwise direction while performing Low, Mid or High Spin Speed test under Component Activation. The following steps assume that this step was unsuccessful.

2. Unplug washer or disconnect power.

3. Check to see if basket will turn freely.
- If basket turns freely, go to step 4.
- If basket does not turn freely, determine what is causing the mechanical friction or lockup.

4. Remove console to access main control.

5. Visually check that the J2 and J6 connectors are inserted all the way into the main control.
- If visual checks pass, go to step 6.
- If visual checks fail, reconnect connectors and repeat step 1.

6. Plug in washer or reconnect power. Run the Motor Slow Agitate test under Component Activation.

7. With a voltmeter set to AC, connect black probe to J6-6 (Neutral) and red probe to J6-4 (CW Winding).
- If 120 VAC is cycling ON during CW rotation, go to step 8.
- If 120 VAC is not present, go to Test #1: Main Control (ACU).

8. With a voltmeter set to AC, connect black probe to J10-6 (Neutral), red probe to J6-1 (CCW Winding).

For Service Technician Use Only

- If 120 VAC is cycling ON during CCW rotation, go to step 9.
- If 120 VAC is not present, go to Test #1: Main Control (ACU).

9. Unplug washer or disconnect power.

10. Remove connector J6 from main control. With an ohmmeter, check resistance of motor windings across the following J6 connector pinouts:

Motor Winding	J10 Pinout	Resistance
CW Winding	J6, 4 and 6	5-9.5 Ω
CCW Winding	J6, 1 and 6	5-9.5 Ω

- If values are open or out of range, go to step 11.
- If values are correct, go to step 15.

11. Tilt washer back to access drive system.

12. Visually check the mounting bracket and electrical connections to the motor and shifter.
- If visual check passes, go to step 13.
- If connections are loose, reconnect the electrical connections, reassemble motor cover, and repeat step 1.

13. With an ohmmeter, check the harness for continuity between the main control, motor, and run capacitor using the following test points.

Motor Harness Check
Motor Connector Pin-1 to Chassis GND
Motor Connector Pin-4 to Main Control J6-1 Motor Connector Pin-4 to Motor Capacitor Pin 1
Motor Connector Pin-3 to Main Control J6-4 Motor Connector Pin-3 to Motor Capacitor Pin 3
Motor Connector Pin-2 to Main Control J6-6

- If there is continuity, go to step 14.
- If there is no continuity, replace the lower machine harness and repeat step 1.

14. With an ohmmeter, check resistance of motor windings at the following motor connections.

Motor Winding	Pinout	Resistance
CW Winding	Pins 3 and 2	5-9.5 Ω
CCW Winding	Pins 4 and 2	5-9.5 Ω

- If values are open or out of range, replace motor.
- If values are correct, go to step 15.

15. Test Motor Run Capacitor.
NOTE: A faulty capacitor may cause the motor to "hum", not start, or turn slowly.
- **a.** Discharge the capacitor by touching the leads of a 20,000 Ω resistor to the two terminals.
- **b.** Disconnect the wires from the capacitor terminals.
- **c.** With an ohmmeter, measure across the terminals and note reading.
  - If a steady increase in resistance is noted, continue to step 16.
  - If the capacitor is either shorted or open, replace capacitor, calibrate, and repeat step 1.

16. If the preceding steps did not correct the motor problem, replace the main control.
- **a.** Unplug washer or disconnect power.
- **b.** Replace the main control.
- **c.** Reassemble all parts and panels.
- **d.** Plug in washer or reconnect power. Calibrate washer and perform the Diagnostic Cycle or Component Activation to verify repair.

Test #4: HMI

Conduct each test within HMI Test in Service Mode including Key, LED, Display, Audio and Encoder Tests. This procedure is performed when any of the following situations occurs during the HMI Tests.

Key presses do not display correctly on the HMI.

- The LED indicators do not light up.
- The display does not show the image sequence.
- No audio feedback is heard.
- Encoder turns do not display correctly on the HMI.

1. Unplug washer or disconnect power.

2. Access the console's electronic assemblies and visually check that the J5 connector is inserted all the way into the main control and that the HMI harness connector is fully seated on the HMI. Ensure the ribbon cables are properly connected on both ends.

3. If both visual checks pass, follow procedure under Test #1: Main Control (ACU) to verify supply voltages.

4. Verify the continuity of the HMI harness.

ACU PIN	Color	HMI PIN
J5-1	Red	J1-1
J5-3	Yellow	J1-3
J5-4	Black	J1-4

- If continuity fails, replace the HMI harness and go to step 5.
- If continuity passes, replace the user interface and go to step 5.

5. Reassemble all parts and panels.

6. Plug in washer or reconnect power.

7. To verify repair, activate the Service Mode, and then perform HMI Test.

Test #5: Temperature Thermistor

This test checks valves, main control, temperature thermistor, and wiring.

1. Check the thermistor by performing the Inlet Thermistor test under Sensor Feedback mode in Service Mode.

2. The screen will display the inlet thermistor temperature in degrees celsius. The cold valve will open and the displayed temperature will drop. Then the hot valve will open and the displayed temperature will increase.
- If the machine operates as expected then the thermistor is operating correctly.
- If the temperature increases first then decreases, check the hose connections and repeat.
- If the displayed temperature does not act as described then proceed to step 3.

3. Unplug washer or disconnect power.

4. Remove console to access main control.

For Service Technician Use Only

5. Remove connector J8 from the main control. With an ohmmeter, measure the resistance of the temperature thermistor between pins J8-9 and J8-8. Verify that the approximate resistance, shown in the table below, is within ambient temperature range.

Thermistor Resistance		
Approximate Temperature		Approximate Resistance
°F	°C	kΩ
32	0	163
41	5	127
50	10	100
59	15	79
68	20	62
77	25	50
86	30	40
95	35	33
104	40	27
113	45	22
122	50	18
131	55	15
140	60	12
149	65	10

- If the resistance is within the range as shown in the table, go to step 6.
- If the resistance is infinite or close to zero, replace the valve assembly.

NOTE: Most thermistor errors are a result of the resistance being out of range. If the temperature thermistor malfunctions, the washer will default to pre-programmed wash settings.

6. If the thermistor is good, replace main control and perform step 1 again to verify repair.

Test #6: Water Level

This test checks the water level sensing components.

NOTE: Usually, if the pressure transducer malfunctions, the washer will generate a long fill, or long drain error (F8E1 or F9E1).

1. Check the functionality of the pressure transducer by running by running the Water Level Pressure Sensor cycle within Service Sensor Feedback.
2. Verify that the valves open and the basket begins to fill. The screen should display the water level rising as the basket fills, then decreasing as the basket drains.
   NOTE: The water level in the basket might not raise high enough to be visible but that is normal.
3. If step 2 behaves correctly skip to step 9, otherwise continue to step 4.
4. Unplug washer or disconnect power.
5. Remove console to access main control.
6. Check hose connection between the pressure transducer on the main control and the pressure dome attached to the tub.
7. Check to ensure hose is routed correctly in the lower cabinet and not pinched or crimped inside the console or by the back panel.
8. Verify there is no water, suds, or debris in the hose or dome. Disconnect hose from main control and blow into hose to clear water, suds, or debris.
9. Check hose for leaks. Replace if needed.
10. If the preceding steps did not correct the problem, replace main control and perform Service Diagnostics. Run Water Level Pressure Sensor cycle within Service Sensor Feedback to verify.

Test #7: Drain Pump

Perform the following checks if washer does not drain.

IMPORTANT: Drain water from tub before accessing the bottom of the washer.

1. Check for obstructions in the usual areas. Clean and then perform step 2.
2. Check the drain pump and electrical connections by turning on the drain pump in Service Component Activation Mode. The following steps assume that this step was unsuccessful.
3. Unplug washer or disconnect power.
4. Remove console to access main control.
5. Visually check that the J6 connector is inserted all the way into the main control.
   - If visual check passes, go to step 6.
   - If connector is not inserted properly, reconnect J6 and repeat step 2.
6. Remove connector J6 from main control. With an ohmmeter, verify resistance values shown below across the following J6 connector pinouts:

Component	J15 Pinout	Resistance
Drain Pump	J6, 3 and 6	17.8-21.8 Ω

   - If values are open or out of range, go to step 7.
   - If values are correct, go to step 11.
7. Tilt washer back to access drain pump. Verify pump is free from obstructions.
8. Visually check the electrical connections at the drain pump.
   - If visual check passes, go to step 9.
   - If connections are loose, reconnect the electrical connections and repeat step 2.
9. With an ohmmeter, check harness for continuity between the drain pump and main control. See chart below:

Main Control to Drain Pump
Drain Pump Pin 1 to Main Control J6-3 (Lt. Blue Wire)
Drain Pump Pin 3 to Main Control J6-6 (White Wire)

   - If there is continuity, go to step 10.
   - If there is no continuity, replace the lower washer harness and repeat step 2.

For Service Technician Use Only

10. With an ohmmeter, measure the resistance across the two pump terminals. Resistance should be as shown in the chart below:

Component	Resistance
Drain Pump	17.8-21.8 Ω

- If values are open or out of range, replace the pump motor.
- If the resistance at the pump motor is correct, go to step 11.

11. If the preceding steps did not correct the drain problem, replace the main control.
    a. Unplug washer or disconnect power.
    b. Replace the main control.
    c. Reassemble all parts and panels.
    d. Plug in washer or reconnect power. Perform Service Diagnostics to verify repair.

Test #8: Lid Lock

Perform the following checks if the washer does not lock (or unlock).

1. Check the lid lock by performing Lid Lock test under Service Load Control Mode in Service Diagnostic Mode. The following steps assume that this step was unsuccessful.
2. Unplug washer or disconnect power.
3. Remove console to access main control.
4. Visually check that the J4 connector is inserted all the way into the main control.
   - If visual check passes, go to step 5.
   - If connector is not inserted properly, reconnect J4 and repeat step 1.
5. Check the lid lock motor winding and switches by removing J4 from the main control and checking the resistance values shown in the following table:

Lid Lock Resistance			
Component	Resistance	Contacts Measured	
Lock Switch Solenoid	50-160 Ω	J4-2	J4-3
Lock Switch	Locked = 0 Ω Unlocked = Open	J4-1	J4-2
Lid Switch	Lid Open = Open Circuit	J4-2	J4-1

   - If resistance values are good, go to step 6.
   - If switch measurements do not match the values shown in the table for unlocked (or locked) condition, a problem exists in the lid lock. Replace the lid lock mechanism.

   NOTE: Ensure that the protective corrugated tubing passes through the hole in the top and that the push mount clip is connected to the top from below. Additionally, route the lid lock wires through the retaining clips on the ACU.

6. If the preceding steps did not correct the lock problem, replace the main control.
   a. Unplug washer or disconnect power.
   b. Replace the main control.
   c. Reassemble all parts and panels.
   d. Plug in washer or reconnect power. Perform Service Diagnostics to verify repair.

For Whirlpool® Belt Drive Models

Test #1: Main Control (ACU)

This test checks for incoming and outgoing power to and from main control. This test assumes that proper voltage is present at the outlet.

1. Unplug washer or disconnect power.
2. Remove console to access main control.
3. Verify that all connectors are inserted all the way into the main control.
4. With a voltmeter set to AC, connect black probe to J1-1 (Neutral) and red probe to J1-2 (Line). Plug in washer or reconnect power.
   - If 120 VAC is present, go to step 5.
   - If 120 VAC is not present, check the AC power cord for continuity. See Figure 3-Main Control (ACU) from section Component Location.
5. Is the "Diagnostic LED" flashing or continuously "ON" or "OFF"? See Figure 2-Diagnostic LED for Whirlpool® Belt Drive Models.
   - Flashing: (+5 VDC present and micro operating) proceed to HMI Test.
   - ON: (+5 VDC but micro failure) continue to step 8.
   - OFF: (+5 VDC missing or micro failure) continue to step 6.
6. Check if console HMI is affecting the main control DC supply.
   a. Unplug washer or disconnect power.
   b. Remove connector J11 from main control.
   c. Plug in washer or reconnect power.
7. Perform voltage checks inside header J11 on the board-do not short pins together.
   a. With a voltmeter set to DC, connect black probe to J11-4 (Circuit Gnd) and red probe to J11-1 (+12 VDC).
   - If DC voltage is not present, go to step 8.
   - If the DC voltage is present, but the diagnostic LED is not flashing, continue to step 8.
8. Main Control has malfunctioned.
   a. Unplug washer or disconnect power.
   b. Replace the main control.
   c. Reassemble all parts and panels.
   d. Plug in washer or reconnect power. Perform Service Diagnostic Cycle to verify repair.

Test #2: Valves

This test checks the electrical connections to the valves, and the valves themselves.

1. Check the relays and electrical connections to the valves by performing the Cold, Hot, Oxi (not on all models), and Fabric Softener Service Test under Component Activation. Each test activates and deactivates the selected valve. The following steps assume one (or more) valve(s) did not turn on.
2. For the valve(s) in question check the individual solenoid valves.
   a. Unplug washer or disconnect power.
   b. Remove console to access main control.
   c. Remove connector J9 from main control. Refer to Figure 2-Main Control (ACU) with Connectors and Pinouts.
   d. Check harness continuity and connection to solenoid valves.

For Service Technician Use Only

3. Check resistance of the valve coils across the following J9 connector pinouts:

Valve	Pinout
Fabric Softener	J9, 1 and 6
OXI (not on all models)	J9, 1 and 7
Hot	J9, 1 and 5
Cold	J9, 1 and 2

Resistance should be 890-1090 Ω.

- If resistance readings are tens of ohms outside of range, replace the valve assembly.
- If resistance readings are within range, replace main control and perform Service Diagnostics to verify repair.

Test #3: Drive System

1. Enter Service Mode and view Fault Codes. If F7E6 or F7E7 Faults are shown then there is likely F7E2, a motor F7E3, or F7E4, shifter related issue. Take note of the faults and clear the faults.
2. Once the error codes are cleared, enter Component Activation Mode and run the Slow Agitation test; if the motor runs after 15-20 seconds, there is not a problem with the motor, control, or motor wiring harness connections.
3. Next, within Component Activation Mode, run the Spin Low Speed cycle. If the motor hums briefly and then shuts down, go to Fault Code display Mode and check for fault codes.
4. After running agitation and spin test, check for fault codes.

Test #3a: Drive System – Shifter

This test checks connections, shifter coil, and harness.

NOTE: Lid must be closed and locked for the motor to agitate or spin.

IMPORTANT: Drain water from tub before accessing bottom of washer.

Functional Check:

1. Check the shifter and electrical connections by performing both the Spin and Agitate tests under Component Activation Mode. The following steps assume that this step was unsuccessful.
2. Unplug washer or disconnect power.
3. The motor and shifter should be able to be turn independently of each other. If they are locked together, there is a shifter slider issue. Proceed to step 11.
   - If basket and impeller turn freely, go to step 4.
   - If basket and/or impeller do not turn freely, determine what is causing the mechanical friction or lockup.
4. Remove console to access main control.
5. Visually check that the J4 and J10 connectors are inserted all the way into the main control.
   - If visual checks pass, go to step 6.
   - If connector is not inserted properly, reconnect J4 and J10 and repeat step 1.

Shifter Motor:

NOTE: Before starting the electrical check, verify that the cam on the splutch is moving freely and not binding.

6. Remove connector J10 from main control. With an ohmmeter, verify resistance of the shifter motor across the following J10 connector pinouts:

Resistance should be 2k to 3.5k Ω.

Component	J10 Connector Pinout
Shifter	J10, 5 and 6

- If values are correct, reconnect J10 and proceed to step 7.
- If values are open or out of range, go to step 13.

7. With a voltmeter set to AC, connect the black probe to J10-5 and red probe to J10-6. Plug in washer or reconnect power. Activate shifter motor by switching the shifter output ON and OFF. Energize outputs using Component Activation Mode.
   NOTE: Motor must be stopped to toggle the shifter. Alternately, Spin and Agitate can be commanded to switch shifter in Component Activation Mode.

   IMPORTANT: Lid must be closed to run the Spin and Agitate tests.
   - If 120 VAC is present, go to step 8.
   - If 120 VAC is not present, unplug washer or disconnect power and go to step 11.

Shifter Switch:

8. With a voltmeter set to DC, connect the black probe to J4-2 (Circuit Gnd) and red probe to J4-1 (Shifter Switch). In Component Activation Mode, switch between Spin and Agitate modes. Voltage should toggle between 0 and +5 VDC.
   SPIN = +5 VDC

   AGITATE = 0 VDC
   - If voltage corresponds to setting, go to step 9.
   - If voltage does not switch, go to step 10.

Optical Sensor:

9. With a voltmeter set to DC, connect the black probe to J4-2 (Circuit Gnd) and a red probe to J4-3 (Tach Pwr).
   - If +12 VDC is present, go to step 10.
   - If +12 VDC is not present, go to step 16.
10. Activate Motor Speed Tachometer from Sensor Feedback. Slowly turn the basket by hand.
    NOTE: Spinning the basket too fast will result in a safety fault for the lid lock. The screen will display the basket speed in RPM.
    - If the tachometer is not verified, go to step 11.
    - If the tachometer is verified, go to step 16.
11. Unplug washer or disconnect power.
12. Tilt washer back to access the bottom of the washer and the drive motor area.
13. Visually check the electrical connections to the shifter.
    - If visual check passes, go to step 14.
    - If connections are loose, reconnect the electrical connections and repeat step 1.
14. With an ohmmeter, check the harness for continuity between the shifter and main control using the pinouts in the following chart.
    - If there is continuity, go to step 15.
    - If there is no continuity, replace the lower washer harness and repeat step 1.

For Service Technician Use Only

Shifter to Main Control and Drain Pump
Shifter Pin 1 to Main Control J4-4
Shifter Pin 2 to Main Control J4-3
Shifter Pin 3 to Main Control J10-6
Shifter Pin 4 to Main Control J4-1
Shifter Pin 5 to Main Control J4-2
Shifter Pin 6 to Main Control J10-5

15. Replace the shifter assembly.
- **a.** Unplug washer or disconnect power.
- **b.** Replace shifter assembly.
- **a.** Reassemble all parts and panels.
- **b.** Plug in washer or reconnect power. Calibrate washer and perform Automatic Test to verify repair.

16. If the preceding steps did not correct the problem, replace the main control.
- **a.** Unplug washer or disconnect power.
- **b.** Replace the main control.
- **c.** Reassemble all parts and panels.
- **d.** Plug in washer or reconnect power. Calibrate washer and perform Automatic Test to verify repair.

Test #3b: Drive System – Motor

This test checks the motor, motor windings, wiring, and start capacitor.

IMPORTANT: Drain water from tub before accessing bottom of washer.

1. Check the motor and electrical connections by performing the Motor Slow or Fast Agitate test under Component Activation . Verify that the basket is spinning in a clockwise direction while performing Low, Mid or High Spin Speed test under Component Activation. The following steps assume that this step was unsuccessful.

2. Unplug washer or disconnect power.

3. Check to see if basket will turn freely.
- If basket turns freely, go to step 4.
- If basket does not turn freely, determine what is causing the mechanical friction or lockup.

4. Remove console to access main control.

5. Visually check that the J4 and J10 connectors are inserted all the way into the main control.
- If visual checks pass, go to step 6.
- If visual checks fail, reconnect connectors and repeat step 1.

6. Plug in washer or reconnect power. Run the Motor Slow Agitate test under Component Activation.

7. With a voltmeter set to AC, connect black probe to J10-6 (Neutral) and red probe to J10-4 (CW Winding).
- If 120 VAC is cycling ON during CW rotation, go to step 8.
- If 120 VAC is not present, go to Test #1: Main Control (ACU).

8. With a voltmeter set to AC, connect black probe to J10-6 (Neutral), red probe to J10-1 (CCW Winding).
- If 120 VAC is cycling ON during CCW rotation, go to step 9.
- If 120 VAC is not present, go to Test #1: Main Control (ACU).

9. Unplug washer or disconnect power.

10. Remove connector J10 from main control. With an ohmmeter, check resistance of motor windings across the following J10 connector pinouts:

Motor Winding	J10 Pinout	Resistance
CW Winding	J10, 4 and 6	5-9.5 Ω
CCW Winding	J10, 1 and 6	5-9.5 Ω

- If values are open or out of range, go to step 11.
- If values are correct, go to step 15.

11. Tilt washer back to access drive system.

12. Visually check the mounting bracket and electrical connections to the motor and shifter.
- If visual check passes, go to step 13.
- If connections are loose, reconnect the electrical connections, reassemble motor cover, and repeat step 1.

13. With an ohmmeter, check the harness for continuity between the main control, motor, and run capacitor using the following test points.

Motor Harness Check
Motor Connector Pin-1 to Chassis GND
Motor Connector Pin-4 to Main Control J10-1 Motor Connector Pin-4 to Motor Capacitor Pin 1
Motor Connector Pin-3 to Main Control J10-4 Motor Connector Pin-3 to Motor Capacitor Pin 3
Motor Connector Pin-2 to Main Control J10-6

- If there is continuity, go to step 14.
- If there is no continuity, replace the lower machine harness and repeat step 1.

14. With an ohmmeter, check resistance of motor windings at the following motor connections.

Motor Winding	Pinout	Resistance
CW Winding	Pins 3 and 2	5-9.5 Ω
CCW Winding	Pins 4 and 2	5-9.5 Ω

- If values are open or out of range, replace motor.
- If values are correct, go to step 15.

15. Test Motor Run Capacitor.
NOTE: A faulty capacitor may cause the motor to “hum”, not start, or turn slowly.
- **a.** Discharge the capacitor by touching the leads of a 20,000 Ω resistor to the two terminals.
- **b.** Disconnect the wires from the capacitor terminals.
- **c.** With an ohmmeter, measure across the terminals and note reading.
- If a steady increase in resistance is noted, continue to step 16.
- If the capacitor is either shorted or open, replace capacitor, calibrate, and repeat step 1.

16. If the preceding steps did not correct the motor problem, replace the main control.
- **a.** Unplug washer or disconnect power.
- **b.** Replace the main control.
- **c.** Reassemble all parts and panels.
- **d.** Plug in washer or reconnect power. Calibrate washer and perform the Diagnostic Cycle or Component Activation to verify repair.

For Service Technician Use Only

Test #4: HMI Test

Conduct each test within HMI Test in Service Mode including Key, LED, Display, Audio and Encoder Tests. This procedure is performed when any of the following situations occurs during the HMI Tests.

- Key presses do not display correctly on the HMI.
- The LED indicators do not light up.
- The display does not show the image sequence.
- No audio feedback is heard.
- Encoder turns do not display correctly on the HMI.

1. Unplug washer or disconnect power.
2. Access the console's electronic assemblies and visually check that the J11 connector is inserted all the way into the main control and that the HMI harness connector is fully seated on the HMI. Ensure the ribbon cables are properly connected on both ends.
3. If both visual checks pass, follow procedure under Test #1: Main Control (ACU) to verify supply voltages.
4. Verify the continuity of the HMI harness.

ACU PIN	Color	HMI PIN
J11-1	Red	J1-1
J11-3	Yellow	J1-3
J11-4	Black	J1-4

   - If continuity fails, replace the HMI harness and go to step 5.
   - If continuity passes, replace the HMI and go to step 5.
5. Reassemble all parts and panels.
6. Plug in washer or reconnect power.
7. To verify repair, activate the Service Mode, and then perform HMI Test.

Test #5: Temperature Thermistor

This test checks valves, main control, temperature thermistor, and wiring.

1. Check the thermistor by performing the Inlet Thermistor test under Sensor Feedback mode in Service Mode.
2. The screen will display the inlet thermistor temperature in degrees celsius. The cold valve will open and the displayed temperature will drop. Then the hot valve will open and the displayed temperature will increase.
   - If the machine operates as expected then the thermistor is operating correctly.
   - If the temperature increases first then decreases, check the hose connections and repeat.
   - If the displayed temperature does not act as described then proceed to step 3.
3. Unplug washer or disconnect power.
4. Remove console to access main control.
5. Remove connector J9 from the main control. With an ohmmeter, measure the resistance of the temperature thermistor between pins J9-4 and J9-8. Verify that the approximate resistance, shown in the table below, is within ambient temperature range.

Thermistor Resistance		
Approximate Temperature		Approximate Resistance
°F	°C	kΩ
32	0	163
41	5	127
50	10	100
59	15	79
68	20	62
77	25	50
86	30	40
95	35	33
104	40	27
113	45	22
122	50	18
131	55	15
140	60	12
149	65	10

   - If the resistance is within the range shown in the table, go to step 6.
   - If the resistance is infinite or close to zero, replace the valve assembly.

   NOTE: Most thermistor errors are a result of the resistance being out of range. If the temperature thermistor malfunctions, the washer will default to pre-programmed wash settings.
6. If the thermistor is good, replace main control and perform step 1 again to verify repair.

Test #6: Water Level

This test checks the water level sensing components.

NOTE: Usually, if the pressure transducer malfunctions, the washer will generate a long fill, or long drain error (F8E1 or F9E1).

1. Check the functionality of the pressure transducer by running the Water Level Pressure Sensor cycle within Service Sensor Feedback.
2. Verify that the valves open and the basket begins to fill. The screen should display the water level rising as the basket fills, then decreasing as the basket drains.
   NOTE: The water level in the basket might not raise high enough to be visible but that is normal.
3. If step 2 behaves correctly skip to step 9, otherwise continue to step 4.
4. Unplug washer or disconnect power.
5. Remove console to access main control.
6. Check hose connection between the pressure transducer on the main control and the pressure dome attached to the tub.

For Service Technician Use Only

7. Check to ensure hose is routed correctly in the lower cabinet and not pinched or crimped inside the console or by the back panel.
8. Verify there is no water, suds, or debris in the hose or dome. Disconnect hose from main control and blow into hose to clear water, suds, or debris.
9. Check hose for leaks. Replace if needed.
10. If the preceding steps did not correct the problem, replace main control and perform Service Diagnostics. Run Water Level Pressure Sensor cycle within Service Sensor Feedback to verify.

Test #7: Drain Pump

Perform the following checks if washer does not drain.

IMPORTANT: Drain water from tub before accessing the bottom of the washer.

1. Check for obstructions in the usual areas. Clean and then perform step 2.
2. Check the drain pump and electrical connections by turning on the drain pump in Service Component Activation Mode. The following steps assume that this step was unsuccessful.
3. Unplug washer or disconnect power.
4. Remove console to access main control.
5. Visually check that the J10 connector is inserted all the way into the main control.
   - If visual check passes, go to step 6.
   - If connector is not inserted properly, reconnect J10 and repeat step 2.
6. Remove connector J10 from main control. With an ohmmeter, verify resistance values shown below across the following J10 connector pinouts:

Component	J15 Pinout	Resistance
Drain Pump	J10, 2 and 6	17.8-1.8 Ω

   - If values are open or out of range, go to step 7.
   - If values are correct, go to step 11.
7. Tilt washer back to access drain pump. Verify pump is free from obstructions.
8. Visually check the electrical connections at the drain pump.
   - If visual check passes, go to step 9.
   - If connections are loose, reconnect the electrical connections and repeat step 2.
9. With an ohmmeter, check harness for continuity between the drain pump and main control. See chart below:

Main Control to Drain Pump
Drain Pump Pin 1 to Main Control J10-2 (Lt. Blue Wire)
Drain Pump Pin 3 to Main Control J10-6 (White Wire)

   - If there is continuity, go to step 10.
   - If there is no continuity, replace the lower washer harness and repeat step 2.
10. With an ohmmeter, measure the resistance across the two pump terminals. Resistance should be as shown in the chart below:

Component	Resistance
Drain Pump	17.8-21.8 Ω

   - If values are open or out of range, replace the pump motor.
   - If the resistance at the pump motor is correct, go to step 11.
11. If the preceding steps did not correct the drain problem, replace the main control.
    a. Unplug washer or disconnect power.
    b. Replace the main control.
    c. Reassemble all parts and panels.
    d. Plug in washer or reconnect power. Perform Service Diagnostics to verify repair.

Test #8: Lid Lock

Perform the following checks if the washer does not lock (or unlock).

1. Check the lid lock by performing Lid Lock test under Service Load Control Mode in Service Diagnostic Mode. The following steps assume that this step was unsuccessful.
2. Unplug washer or disconnect power.
3. Remove console to access main control.
4. Visually check that the J3 connector is inserted all the way into the main control.
   - If visual check passes, go to step 5.
   - If connector is not inserted properly, reconnect J3 and repeat step 1.
5. Check the lid lock motor winding and switches by removing J3 from the main control and checking the resistance values shown in the following table:

Lid Lock Resistance			
Component	Resistance	Contacts Measured	
Lock Switch Solenoid	50-160 Ω	J3-2	J3-3
Lock Switch	Locked = 0 Ω Unlocked = Open	J3-1	J3-2
Lid Switch	Lid Open = Open Circuit	J3-2	J3-1

   - If resistance values are good, go to step 6.
   - If switch measurements do not match the values shown in the table for unlocked (or locked) condition, a problem exists in the lid lock. Replace the lid lock mechanism.

   NOTE: Ensure that the protective corrugated tubing passes through the hole in the top and that the push mount clip is connected to the top from below. Additionally, route the lid lock wires through the retaining clips on the ACU.
6. If the preceding steps did not correct the lock problem, replace the main control.
   a. Unplug washer or disconnect power.
   b. Replace the main control.
   c. Reassemble all parts and panels.
   d. Plug in washer or reconnect power. Perform Service Diagnostics to verify repair.

For Service Technician Use Only

Test #9: Load & Go™ Detergent (Not On All Models)

To test the bulk detergent dispenser, ensure that the drawer is filled with detergent. The bulk sensor and bulk pump can be tested individually.

Bulk Sensor

1. Enter Service Mode and run the Sensor Feedback Detergent Level cycle. Ensure that the drawer is fully inserted.
2. Ensure that the screen is outputting the detergent level percentage in the drawer.
   NOTE: This output value may read slightly lower than it appears in the drawer.
   - The following procedures are asssuming the output value was not as expected.
3. Unplug washer or disconnect power.
4. Remove console to access main control.
5. Visually check that the J9 connector is inserted all the way into the main control.
   - If visual check passes, go to step 6.
   - If connector is not inserted properly, reconnect J9 and repeat step 1.
6. Plug in washer or resconnect power.
7. Verify input DC voltage and analog output DC voltage of the bulk sensor as per the following table:

Bulk Sensor Operating Voltage			
Voltage (DC)	Range	Contacts Measured	
Input Voltage	4.75-15.25 VDC	J9-1	J9-4
Analog Output Voltage	1.4-3.10 VDC	J9-2	J9-4

8. If the analog output voltage of the bulk sensor is out of range, replace the bulk sensor component. Otherwise, proceed to step 9.
   a. Unplug washer or disconnect power.
   b. Replace the bulk sensor component.
   c. Reassemble all parts and panels.
   d. Plug in washer or reconnect power. Perform Sensor Feedback Detergent Level and Component Activation Detergent Pump.
9. If the input voltage of the bulk sensor is out of range, replace the main control.
   a. Unplug washer or disconnect power.
   b. Replace the main control.
   c. Reassemble all parts and panels.
   d. Plug in washer or reconnect power. Perform Sensor Feedback Detergent Level and Component Activation Detergent Pump.

Bulk Detergent Pump

1. Enter Service Mode and run the Component Activation Detergent Pump cycle.
2. Ensure that detergent is dispensed into the basket.
   - The following procedures are assuming the output was not as expected.
3. Unplug washer or disconnect power.
4. Remove console to access main control.
5. Visually check that the J17 connector is inserted all the way into the main control.
   - If visual check passes, go to step 6.
   - If connector is not inserted properly, reconnect J17 and repeat step 1.
6. Visually check the bulk pump extension harness is connected to the bulk pump connector that is protruding through the top.
   - If visual check passes, go to step 7.
   - If not, repair or replace as needed.
7. Check continuity of the bulk pump extension harness.
   - If the continuity test passes, go to step 8.
   - If not, repair or replace as needed.
8. Remove connector J17 from main control. With an ohmmeter, verify resistance values shown below across the following J17 connector pinouts:

Component	J17 Pinout	Resistance
Bulk Pump	J17, pins 2 - 3	16-19 Ω

   - If values are open or out of range, go to step 9, replace the Bulk Pump component, otherwise go to step 9.
   a. Unplug washer or disconnect power.
   b. Replace the bulk sensor component.
   c. Reassemble all parts and panels.
   d. Plug in washer or reconnect power. Perform Sensor Feedback. Detergent Level and Component Activation Bulk Pump.
9. If the preceding steps did not correct the bulk detergent problem, replace the main control.
   a. Unplug washer or disconnect power.
   b. Replace the main control.
   c. Reassemble all parts and panels.
   d. Plug in washer or reconnect power. Perform Sensor Feedback Detergent Level and Component Activation Bulk Pump.

Test #10: Faucet Switch (On Some Models)

Perform the following checks if the faucet does not dispense water when pressing the faucet switch button.

1. Check the faucet valve functionality by performing the Faucet Valve test under Service Test Mode in Service Diagnostic Mode. The following steps assume correct valve functionality.
2. Unplug washer or disconnect power.
3. Remove console to access main control.
4. Visually check that the J5 connector is inserted all the way into the main control.
   - If visual check passes, go to step 5.
   - If connector is not inserted properly, reconnect J5 and repeat step 1.
5. Visually check that the faucet switch extension harness is connected to the faucet switch harness connector that is protruding through the top. (See Figure 3-Main Control (ACU) from section Component Location.
   - If the harness and connections are good, go to step 6.
   - If not, repair or replace as needed.
6. Check continuity of pin 1 and pin 2 of the J5 connector. Continuity should exist across pins 1 and 2 while the switch button is pressed, and should not exist when the switch button is not activated.
   - If continuity check passes, go to step 7.
   - If continuity check fails, a problem exists with the faucet switch. Replace the faucet switch assembly.

For Service Technician Use Only

7. If the preceding steps did not correct the faucet switch problem, replace the main control.
   a. Unplug washer or disconnect power.
   b. Replace the main control.
   c. Reassemble all parts and panels.
   d. Plug in washer or reconnect power. Perform Service Diagnostics to verify repair.

For Whirlpool® and Maytag® Direct Drive Models

Test #1: Main Control (ACU)

This test checks for incoming and outgoing power to and from main control. This test assumes that proper voltage is present at the outlet.

1. Unplug washer or disconnect power.
2. Remove console to access main control.
3. Verify that all connectors are inserted all the way into the main control.
4. With a voltmeter set to AC, connect black probe to J1-1 (Neutral) and red probe to J1-2 (Line).Plug in washer or reconnect power.
   - If 120 VAC is present, go to step 5.
   - If 120 VAC is not present, check the AC power cord for continuity (See Figure 5-Main Control (ACU) from section Component Location.
5. Is the "Diagnostic LED" flashing or continuously "ON" or "OFF"? See Figure 3-Diagnostic LED for Whirlpool® and Maytag® Direct Drive Models.
   - Flashing: (+5 VDC present and micro operating) proceed to HMI Test.
   - ON: (+5 VDC but micro failure) continue to step 8.
   - OFF: (+5 VDC missing or micro failure) continue to step 6.
6. Check if console HMI is affecting the main control DC supply.
   a. Unplug washer or disconnect power.
   b. Remove connector J14 from main control.
   c. Plug in washer or reconnect power.
   d. Recheck the Diagnostic LED per step 5.
   - If the diagnostic LED is now flashing, go to HMI Test. If diagnostic LED is not flashing, continue to step 7.
7. Perform voltage checks inside header J14 on the board-do not short pins together.
   a. With a voltmeter set to DC, connect black probe to J14-4 (Circuit Gnd) and red probe to J14-1 (+12.7 VDC).
   - If DC voltage is not present, go to step 8.
   - If the DC voltage is present, but the diagnostic LED is not flashing, continue to step 8.
8. Main Control has malfunctioned.
   a. Unplug washer or disconnect power.
   b. Replace the main control.
   c. Reassemble all parts and panels.
   d. Plug in washer or reconnect power. Perform Service Diagnostic Cycle to verify repair.

Test #2: Valves

This test checks the electrical connections to the valves, and the valves themselves.

1. Check the relays and electrical connections to the valves by performing the Cold, Hot, Oxi (not on all models), and Fabric Softener Service Test under Component Activation. Each test activates and deactivates the selected valve. The following steps assume one (or more) valve(s) did not turn on.For the valve(s) in question check the individual solenoid valves.
   a. Unplug washer or disconnect power.
   b. Remove console to access main control.
   c. Remove connector J8 from main control. Refer to Figure 3 - Main Control (ACU) and Connector and Pinouts.
   d. Check harness continuity and connection to solenoid valves.
2. Check resistance of the valve coils across the following J16 connector pinouts:

Valve	Pinout
Fabric Softener	J16, 1 and 6
OXI (not on all models)	J16, 1 and 7
Hot	J16, 1 and 5
Cold	J16, 1 and 2

Resistance should be 890-1090 Ω.

- If resistance readings are tens of ohms outside of range, replace the valve assembly.
- If resistance readings are within range, replace main control and perform Service Diagnostics to verify repair.

Test #3: Drive System

1. Enter Service Mode and view Fault Codes. If F7E3, F7E4, F7E6, F7E7, F7E8, F7E9 or F7EA faults are shown then there is likely a motor or shifter related issue. Take note of the faults and clear the faults.
2. Once the error codes are cleared, enter Component Activation Mode and run the Slow Agitation test; if the motor runs after 15-20 seconds, there is not a problem with the motor, control, or motor wiring harness connections.
3. Next, within Component Activation Mode, run the Spin Low Speed cycle. If the motor hums briefly and then shuts down, go to Fault Code display Mode and check for fault codes.
4. After running agitation and spin test, check for fault codes.

Test #3a: Drive System – Shifter

This test checks connections, shifter coil, and harness.

NOTE: Lid must be closed and locked for the motor to agitate or spin.

IMPORTANT: Drain water from tub before accessing bottom of washer.

Functional Check:

1. Check the shifter and electrical connections by performing both the Spin and Agitate tests under Service Test Mode. The following steps assume that this step was unsuccessful.
2. Unplug washer or disconnect power.
3. The motor and shifter should be able to be turned independently of each other. If they are locked together, there is a shifter slider issue. Proceed to step 11.
   - If basket and impeller turn freely, go to step 4.
   - If basket and/or impeller do not turn freely, determine what is causing the mechanical friction or lockup.
4. Remove console to access main control.
5. Visually check that the J3 connector is inserted all the way into the main control.
   - If visual checks pass, go to step 6.

For Service Technician Use Only

- If connector is not inserted properly, reconnect J3 and repeat step 1.

6. With a voltmeter set to AC, connect the black probe to J15-1 (N) and red probe to J15-4. Plug in washer or reconnect power. Activate shifter motor by switching the shifter output ON and OFF. Energize outputs using Component Activation Mode.
NOTE: Motor must be stopped to toggle the shifter. Alternately, Spin and Agitate can be commanded to switch shifter in Component Activation Mode.

IMPORTANT: Lid must be closed to run the Spin and Agitate tests.

- If 120 VAC is present, go to step 7.
- If 120 VAC is not present, unplug washer or disconnect power and go to step 11**.**

7. Unplug washer or disconnect power.

8. Tilt washer back and remove sound pad (if equipped) to access the drive system (see Figure 1 below).

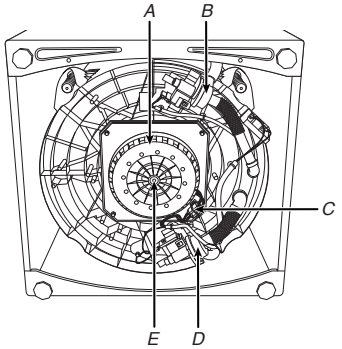

Figure 1 - Drive Area (Bottom View), Sound Pad (If Equipped) Removed

A. Motor Cover
B. Recirculation Pump
C. Motor Bolt
D. Motor/Shifter Connection
E. Drain Pump

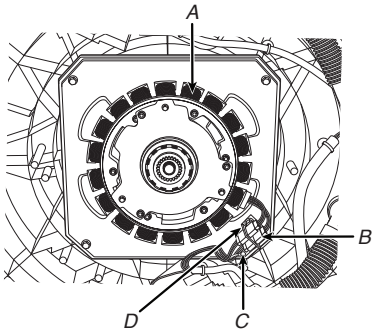

Figure 2 - Drive Area (Bottom View - Motor Cover Removed) and Checking Slider Movement/Alignment

A. Stator
B. Motor Connection
C. Ground Connection
D. Shifter Connection

9. Visually check the electrical connections to the shifter.
- If visual check passes, go to step 11.
- If connections are loose, reconnect the electrical connections and repeat step 1.

10. With an ohmmeter, check the harness for continuity between the shifter and main control using the following pinouts. See chart below.

Shifter Connector Harnesses
J15-1 (White wire) to shifter connector Pin 3 (White wire)
J15-4 (Orange wire) to connector Pin 1 (Orange wire)

11. Remove the motor bolt, then the motor cover (see Figure 1 on this page). Remove the motor stator and the shifter coil and confirm that the slider on the motor shaft moves freely (see Figure 2 on this page).
- If slider moves freely, and there are no indications of rubbing on the inside diameter of the shifter coil and outside diameter of the slider, go to step 13.
- If slider binds or does not move freely, or there are indications of rubbing on the inside diameter of the shifter coil or outside diameter of the slider, replace the drive.

a. Unplug washer or disconnect power.
b. Replace the drive.
c. Reassemble all parts and panels.
d. Plug in washer or reconnect power. Perform Service Diagnostics to verify repair.

12. If the preceding steps did not correct the problem, replace the main control.
a. Unplug washer or disconnect power.
b. Replace the main control.
c. Reassemble all parts and panels.
d. Plug in washer or reconnect power. Perform Service Diagnostics to verify repair.

TEST #3b: Drive System – Motor

This test checks the wiring to the motor and the motor itself.

NOTE: Drain water from tub and remove any wash load items present in the basket.

1. See Component Activation Mode, and check the motor and electrical connections by performing the Low, Mid, and High Speed Spin Test under Service Load Control Mode. The following steps assume that this step failed.

2. Unplug washer or disconnect power.

3. Check to see if impeller will turn freely and is not connected to the basket.
NOTE: Rotating the impeller quickly can cause the HMI to attempt to power up, and may cause audible feedback and the main control to power up and apply braking torque to the impeller.
- If impeller turns freely, go to step 4.
- If impeller does not turn freely, determine what is causing the mechanical friction or lockup.

4. Remove console to access main control.

5. Visually check that the J3 connector is inserted all the way into the main control.
- If visual checks pass, go to step 6.
- If visual checks fail, reconnect J3 and repeat step 1.

6. With an ohmmeter, verify resistance values as shown below:

Check Between Connector Pins	Resistance Value Should be:	Go to Step 7 if Values are:	Go to Step 10 if Values are:	Go to Step 15 if:
J3, 1-2 J3, 1-3	8-10 Ω 8-10 Ω	Much > 10 Ω	Much < 8 Ω	8-10 Ω 8-10 Ω

For Service Technician Use Only

7. Tilt washer back to access the bottom of the washer and the drive motor area (see Figure 1 on earlier page).
8. Visually check that the motor connection on the drive is fully inserted into its mating connector.
9. With an ohmmeter, check for continuity on the motor harness between all pins on the J3 machine/motor control connector and the drive motor connector.
   - If there is continuity, go to step 10.
   - If there is no continuity, replace the lower washer harness and run Service Diagnostics to verify repair.
10. Tilt washer back (if it is not already) to disconnect the motor connector and use an ohmmeter to verify the motor resistance values at the drive motor connector [see Figure 1-Drive Area (Bottom View)].

Check Between Drive Motor Connector	Resistance value should be:	Go to Step 11 if Values are:	Go to Step 14 if Values are:	Go to Step 15 if
2-4 (R-BR) 2-3 (BR BK)	8-10 Ω 8-10 Ω	Much > 10 Ω	Much < 8 Ω	8-10 Ω 8-10 Ω

11. Remove the motor bolt, then the motor cover [see Figure 1-Drive Area (Bottom View) and Figure 2-Drive Area (Bottom View - Motor Cover Removed) and Checking Slider Movement/Alignment].
12. Remove the shifter coil and stator to access the motor connection.
13. Visually check that motor electrical connection cover is fully seated (see below Figure 3).
    - If visual checks pass, go to step 14.
    - If visual checks fail, fully seat the motor connection cover, reassemble stator and motor cover, and repeat step 1.

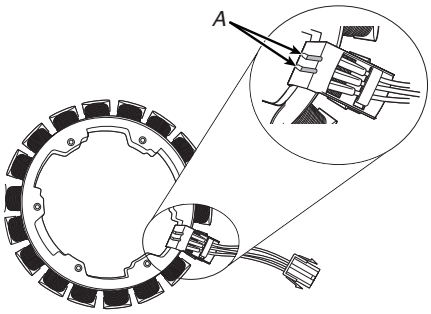

Figure 3 - Removing Shifter Coil and Checking Motor Electrical Connection

A. Motor Electrical Connection Cover (verify that clips are fully seated)

14. Replace the drive and perform Service Diagnostics to verify repair.
    - If the motor still fails to operate, go to step 15.
15. If the above tests have failed to fix motor drive issues, the main control has failed:
    - Unplug washer or disconnect power.
    - Replace the main control assembly.
    - Perform Service Diagnostics to verify repair.

Test #4: HMI Test

Conduct each test within HMI Test in Service Mode including Key, LED, Display, Audio and Encoder Tests. This procedure is performed when any of the following situations occurs during the HMI Tests.

- Key presses do not display correctly on the HMI.
- The LED indicators do not light up.
- The display does not show the image sequence.
- No audio feedback is heard.
- Encoder turns do not display correctly on the HMI. Unplug washer or disconnect power.

16. Access the console's electronic assemblies and visually check that the J14 connector is inserted all the way into the main control and that the HMI harness connector is fully seated on the HMI. Ensure the ribbon cables are properly connected on both ends.
17. If both visual checks pass, follow procedure under Test #1: Main Control (ACU) to verify supply voltages.
18. Verify the continuity of the HMI harness.

ACU PIN	Color	HMI PIN
J14-1	Red	J1-1
J14-3	Yellow	J1-3
J14-4	Black	J1-4

    - If continuity fails, replace the HMI harness and go to step 5.
    - If continuity passes, replace the user interface and go to step 5.
19. Reassemble all parts and panels.
20. Plug in washer or reconnect power.
21. To verify repair, activate the Service Mode, and then perform HMI Test.

Test #5: Temperature Thermistor

This test checks valves, main control, temperature thermistor, and wiring.

1. Check the thermistor by performing the Inlet Thermistor test under Sensor Feedback mode in Service Mode.
2. The screen will display the inlet thermistor temperature in degree celsius. The cold valve will open and the displayed temperature will drop. Then the hot valve will open and the displayed temperature will increase.
   - If the machine operates as expected then the thermistor is operating correctly.
   - If the temperature increases first then decreases, check the hose connections and repeat.
   - If the displayed temperature does not act as described then proceed to step 3.
3. Unplug washer or disconnect power.
4. Remove console to access main control.

For Service Technician Use Only

5. Remove connector J16 from the main control. With an ohmmeter, measure the resistance of the temperature thermistor between pins J16-4 and J16-8. Verify that the approximate resistance, shown in the table below, is within ambient temperature range.

Thermistor Resistance		
Approximate Temperature		Approximate Resistance
°F	°C	KΩ
32	0	163
41	5	127
50	10	100
59	15	79
68	20	62
77	25	50
86	30	40
95	35	33
104	40	27
113	45	22
122	50	18
131	55	15
140	60	12
149	65	10

- If the resistance is within the range shown in the table, go to step 6.
- If the resistance is infinite or close to zero, replace the valve assembly.

NOTE: Most thermistor errors are a result of the resistance being out of range. If the temperature thermistor malfunctions, the washer will default to pre-programmed wash settings.

6. If the thermistor is good, replace main control and perform step 1 again to verify repair.

TEST #6: Water Level

This test checks the water level sensing components.

NOTE: Usually, if the pressure transducer malfunctions, the washer will generate a long fill, or long drain error (F8E1 or F9E1).

1. Check the functionality of the pressure transducer by running the Water Level Pressure Sensor cycle within Service Sensor Feedback.
2. Verify that the valves open and the basket begins to fill. The screen should display the water level rising as the basket fills, then decreasing as the basket drains.
   NOTE: The water level in the basket might not raise high enough to be visible but that is normal.
3. If step 2 behaves correctly skip to step 9, otherwise continue to step 3.
4. Unplug washer or disconnect power.
5. Remove console to access main control.
6. Check hose connection between the pressure transducer on the main control and the pressure dome attached to the tub.
7. Check to ensure hose is routed correctly in the lower cabinet and not pinched or crimped inside the console or by the back panel.
8. Verify there is no water, suds, or debris in the hose or dome. Disconnect hose from main control and blow into hose to clear water, suds, or debris.
9. Check hose for leaks. Replace if needed.
10. If the preceding steps did not correct the problem, replace main control and perform Service Diagnostics. Run Water Level Pressure Sensor cycle within Service Sensor Feedback to verify.

Test #7: Drain Pump and Recirculation Pump (On Some Models)

Perform the following checks if washer does not drain.

IMPORTANT: Drain water from tub before accessing the bottom of the washer.

1. Check for obstructions in the usual areas. Clean and then perform step 2.
2. Check the drain pump (and recirc. pump, on some models) and electrical connections by turning on the drain pump (and recirculation pump, on some models) in Service Component Activation Mode. The following steps assume that this step was unsuccessful.
3. Unplug washer or disconnect power.
4. Remove console to access main control.
5. Visually check that the J15 connector is inserted all the way into the main control.
   - If visual check passes, go to step 6.
   - If connector is not inserted properly, reconnect J15 and repeat step 2.
6. Remove connector J15 from main control. With an ohmmeter, verify resistance values shown below across the following J15 connector pinouts:

Component	J15 Pinout	Resistance
Drain Pump	J15, 1 and 2	17.8-21.8 Ω
Recirculation Pump	J15, 1 and 3	26-32 Ω

   - If values are open or out of range, go to step 7.
   - If values are correct, go to step 11.
7. Tilt washer back to access drain pump (and recirc. pump, on some models). Verify pump is free from obstructions.
8. Visually check the electrical connections at the drain pump (and, on some models, the recirculation pump).
   - If visual check passes, go to step 9.
   - If connections are loose, reconnect the electrical connections and repeat step 2.

For Service Technician Use Only

9. With an ohmmeter, check harness for continuity between the drain pump (and recirculation pump, on some models) and main control. See chart below:

Main Control to Drain Pump
Drain Pump Pin 1 to Main Control J15-2 (Pink Wire)
Drain Pump Pin 3 to Main Control J15-1 (White Wire)
Recirculation Pump Pin 1 to Main Control J15-3 (Blue Wire)
Recirculation Pump Pin 3 to Main Control J15-1 (White Wire)

- If there is continuity, go to step 10.
- If there is no continuity, replace the lower washer harness and repeat step 2.

10. With an ohmmeter, measure the resistance across the two pump terminals. Resistance should be as shown in the chart below.

Component	Resistance
Drain Pump	17.8-21.8 Ω
Recirculation Pump	26-32 Ω

- If values are open or out of range, replace the pump motor.
- If the resistance at the pump motor is correct, go to step 11.

11. If the preceding steps did not correct the drain problem, replace the main control.
    a. Unplug washer or disconnect power.
    b. Replace the main control.
    c. Reassemble all parts and panels.
    d. Plug in washer or reconnect power. Perform Service Diagnostics to verify repair.

Test #8: Lid Lock

Perform the following checks if the washer does not lock (or unlock).

1. Check the lid lock by performing Lid Lock test under Service Load Control Mode in Service Diagnostic Mode. The following steps assume that this step was unsuccessful.
2. Unplug washer or disconnect power.
3. Remove console to access main control.
4. Visually check that the J6 connector is inserted all the way into the main control.
    - If visual check passes, go to step 5.
    - If connector is not inserted properly, reconnect J6 and repeat step 1.
5. Check the lid lock motor winding and switches by removing J6 from the main control and checking the resistance values shown in the following table:

Lid Lock Resistance			
Component	Resistance	Contacts Measured	
Lock Switch Solenoid	50-160 Ω	J6-2	J6-3
Lock Switch	Locked = 0 Ω Unlocked = Open	J6-1	J6-2
Lid Switch	Lid Open = Open Circuit	J6-2	J6-1

- If resistance values are good, go to step 6.
- If switch measurements do not match the values shown in the table for unlocked (or locked) condition, a problem exists in the lid lock. Replace the lid lock mechanism.

NOTE: Ensure that the protective corrugated tubing passes through the hole in the top and that the push mount clip is connected to the top from below. Additionally, route the lid lock wires through the retaining clips on the ACU.

6. If the preceding steps did not correct the lock problem, replace the main control.
    a. Unplug washer or disconnect power.
    b. Replace the main control.
    c. Reassemble all parts and panels.
    d. Plug in washer or reconnect power. Perform Service Diagnostics to verify repair.

Test #9: Load & Go™ Detergent (Not On All Models)

To test the bulk detergent dispenser, ensure that the drawer is filled with detergent. The bulk sensor and bulk pump can be tested individually.

Bulk Sensor

1. Enter Service Mode and run the Sensor Feedback Detergent Level cycle. Ensure that the drawer is fully inserted.
2. Ensure that the screen is outputting the detergent level percentage in the drawer.
   NOTE: This output value may read slightly lower than it appears in the drawer.
    - The following procedures are asssuming the output value was not as expected.
3. Unplug washer or disconnect power.
4. Remove console to access main control.
5. Visually check that the J9 connector is inserted all the way into the main control.
    - If visual check passes, go to step 6.
    - If connector is not inserted properly, reconnect J9 and repeat step 1.
6. Plug in washer or reconnect power.
7. Verify input DC voltage and analog output DC voltage of the bulk sensor as per the following table:

Bulk Sensor Operating Voltage			
Voltage (DC)	Range	Contacts Measured	
Input Voltage	4.75-15.25 VDC	J9-1	J9-4
Analog Output Voltage	1.4-3.10 VDC	J9-2	J9-4

8. If the analog output voltage of the bulk sensor is out of range, replace the bulk sensor component. Otherwise, proceed to step 9.
    a. Unplug washer or disconnect power.
    b. Replace the bulk sensor component.
    c. Reassemble all parts and panels.
    d. Plug in washer or reconnect power. Perform Sensor Feedback Detergent Level and Component Activation Detergent Pump.

For Service Technician Use Only

9. If the input voltage of the bulk sensor is out of range, replace the main control.
   a. Unplug washer or disconnect power.
   b. Replace the main control.
   c. Reassemble all parts and panels.
   d. Plug in washer or reconnect power. Perform Sensor Feedback Detergent Level and Component Activation Detergent Pump.

Bulk Detergent Pump

1. Enter Service Mode and run the Component Activation Detergent Pump cycle.
2. Ensure that detergent is dispensed into the basket.
   - The following procedures are assuming the output was not as expected.
3. Unplug washer or disconnect power.
4. Remove console to access main control.
5. Visually check that the J17 connector is inserted all the way into the main control.
   - If visual check passes, go to step 6.
   - If connector is not inserted properly, reconnect J17 and repeat step 1.
6. Visually check the bulk pump extension harness is connected to the bulk pump connector that is protruding through the top.
   - If visual check passes, go to step 7.
   - If not, repair or replace as needed.
7. Check continuity of the bulk pump extension harness.
   - If the continuity test passes, go to step 8.
   - If not, repair or replace as needed.
8. Remove connector J17 from main control. With an ohmmeter, verify resistance values shown below across the following J17 connector pinouts:

Component	J17 Pinout	Resistance
Bulk Pump	J17, pins 2-3	16-19 Ω

   - If values are open or out of range, go to step 9, replace the Bulk Pump component, otherwise go to step 9.
   a. Unplug washer or disconnect power.
   b. Replace the bulk sensor component.
   c. Reassemble all parts and panels.
   d. Plug in washer or reconnect power. Perform Sensor Feedback. Detergent Level and Component Activation Bulk Pump.
9. If the preceding steps did not correct the bulk detergent problem, replace the main control.
   a. Unplug washer or disconnect power.
   b. Replace the main control.
   c. Reassemble all parts and panels.
   d. Plug in washer or reconnect power. Perform Sensor Feedback Detergent Level and Component Activation Bulk Pump.

Test #10: Faucet Switch (On Some Models)

Perform the following checks if the faucet does not dispense water when pressing the faucet switch button.

1. Check the faucet valve functionality by performing the Faucet Valve test under Service Test Mode in Service Diagnostic Mode. The following steps assume correct valve functionality.
2. Unplug washer or disconnect power.
3. Remove console to access main control.
4. Visually check that the J8 connector is inserted all the way into the main control.
   - If visual check passes, go to step 5.
   - If connector is not inserted properly, reconnect J8 and repeat step 1.
5. Visually check that the faucet switch extension harness is connected to the faucet switch harness connector that is protruding through the top. [See Figure 5-main Control (ACU)].
   - If the harness and connections are good, go to step 6.
   - If not, repair or replace as needed.
6. Check continuity of pin 1 and pin 2 of the J8 connector. Continuity should exist across pins 1 and 2 while the switch button is pressed, and should not exist when the switch button is not activated.
   - If continuity check passes, go to step 7.
   - If continuity check fails, a problem exists with the faucet switch. Replace the faucet switch assembly.
7. If the preceding steps did not correct the faucet switch problem, replace the main control.
   a. Unplug washer or disconnect power.
   b. Replace the main control.
   c. Reassemble all parts and panels.
   d. Plug in washer or reconnect power. Perform Service Diagnostics to verify repair.

For Service Technician Use Only
Troubleshooting Guide for Connected Washer

Control Panel Overview

Remote Enable Button

Touch the "Remote Enable" key during the initial connection of the washer to the home Wi-Fi network. The Wi-Fi status indicator will show on the HMI. Enter the mobile app and press "Add Appliance." Follow the app and HMI instructions to connect the appliance and claim the unit. Bluetooth on your mobile device must be on in order to connect.

Custom Cycle Option

Enter the mobile app and create a custom cycle through the "Favorites" tab. Set your desired settings and press "Send to Appliance" and follow the process to upload to your machine. The cycle has now been saved as a Custom Cycle on the machine. Press the "Custom Cycle" key to select this cycle.

Remote Start

Press the "Remote Enable" key on the appliance to enable the capability of remote start. The remote start indicator will be shown. Open the mobile app and press "Set Washer." Pick your desired settings. Press "Start" to remote start the cycle.

NOTE: Any interaction with the washer once a Remote Start has been set will cause the mode to cancel. See "Using Your Washer-Smart Operation" in the Use and Care Guide for details.

Connectivity Status Indicators

Remote Start

Wi-Fi

Checking Connection Status

If the washer is operating properly, the connection status can be determined from the icons on the HMI.

Connection Status	Control Panel Indicator Lights
Washer is claimed as well as connected to home router and Whirlpool Cloud (WCloud).	• Wi-Fi icon is ON (solid white)
Washer is attempting to connect to home router.	• Wi-Fi icon is progressing
Washer is not connected.	• Wi-Fi icon is OFF

If Washer Is Not Connected (Wi-Fi Icon is OFF)

1. Press POWER button to view all icons along the top bar of the HMI. If Wi-Fi icon is off, go to step 2.
2. Potential reasons for not being connected:
   - Washer has never been connected to the home router (has never been claimed).
   - The Wi-Fi connection has been turned off. This is done by pressing the "Remote Enable" key for 15 seconds.
   - The washer has been de-claimed. This is done by pressing the "Remote Enable" key for 15 seconds or through the mobile app. The appliance will stay in the user's account but labeled as "offline."
   - The washer has been deleted from the user's account. This is done by deleting the appliance on the mobile app. The effect is the same as if the washer has never been claimed.
   - Signal strength problem (location or router relative to washer or excessive interference noise).
   - Problem with the router.
   - Problem with the washer.

Claiming the Washer

(connecting it to the home router and WCloud for the first time)

Automatic Setup Instructions - Wi-Fi Protected Setup (WPS)

You will need:

- A home wireless router capable of Wi-Fi Protected Setup (WPS). The router should be on and have a live Internet connection.
- The Smart Appliance ID (SAID) from the washer. This is located on a sticker under the washer lid.

NOTE: If the home wireless router is not equipped with a WPS button, please check the user manual of the router to confirm if it is WPS capable. If not, for alternate setup instructions please visit **www.whirlpool.com/connect** for Whirlpool washers and **www.maytag.com/connect** for Maytag washers.

1. Press the WPS button on the router. An indicator light will begin blinking.

Helpful Tip: The WPS function on the router is active for 2 minutes. Complete the next step within that time frame or you will need to reinitiate WPS.

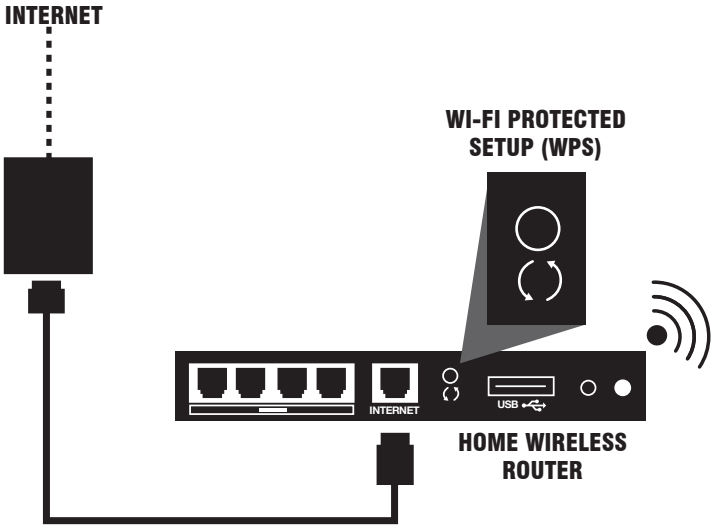

Figure 1 - Wi-Fi Protected setup (WPS)

2. Press Power to turn on the washer, then touch the "Remote Enable" key. The screen will display "Use the App to Setup Wi-Fi."
3. Download the Whirlpool mobile app depending on if the appliance is Whirlpool. Create an account on the mobile app.
4. Ensure the bluetooth on your mobile device is turned on. In some cases, location services will also need to be enabled.

For Service Technician Use Only

5. Open the mobile app and press "Add Appliance." Follow the instructions shown in the app and on the HMI to complete the claiming process.
   NOTE: The appliance must connect to 2.4 GHz Wi-Fi so be sure that the mobile device is connected to the 2.4 GHz network. Some Wi-Fi networks combine 2.4 and 5 GHz. In this case the combined network will connect as well.

If the Washer Doesn't Connect

If the washer and router fail to connect, the Wi-Fi icon will fill with white then go dark and repeat. Check any connection instructions for the specific router, and for alternate setup instructions please visit **www.whirlpool.com/connect** for Whirlpool washers and **www.maytag.com/connect** for Maytag washers.

Turning Wi-Fi Back On

If the washer has already been claimed and the Wi-Fi icon is off, Wi-Fi might have been turned off (holding the "Remote Enable" key for 15 seconds will disable the washer's Wi-Fi connectivity). To turn the Wi-Fi back on, repeat the claiming process however instead of pressing "Add Appliance", select your washer which will appear in the app.

Troubleshooting Failure of Washer to Connect to Router

1. Unplug the washer or disconnect power. Wait 30 seconds, then return power to the washer. Repeat claiming process. If unsuccessful, go to step 2.
2. During the claiming process use the mobile app to identify if the problem resides with the home network or the appliance.

Troubleshooting Home Network Connectivity – Not Able to Connect to Home Router

Troubleshooting Home Network Connectivity-Not Able to Connect to Home Router.

1. Is the consumer connected to the Internet after installing the router - Can they access the Internet on their home computer(s)?
   - If yes, try claiming the washer again.
2. Does the consumer have a wireless router - Can they use mobile Wi-Fi devices in their home to access the Internet?
   - If no, refer the consumer to their internet service provider.
   - If yes, continue to step 3.
3. Verify that the consumer's wireless router and modem are ON.
   - If the equipment is OFF, notify the consumer to turn ON the equipment in the following order: turn on the modem and wait 2 minutes, then turn on the router and wait 2 minutes. Verify the link between the washer and the router by pressing "Remote Enable" on the washer and use the mobile app as instructed on the HMI.
4. Does the consumer have the correct wireless router? If using the WPS method, the wireless router must support the WPS-2 standard.
   - If the consumer's home wireless router is not equipped with a WPS button, instruct the consumer to check the user manual of their router to confirm if it is WPS capable. If not, for alternate setup instructions please **visit www.whirlpool.com/connect** for Whirlpool washers and **www.maytag.com/connect** for Maytag washers.
5. If using the WPS method, did the consumer push the WPS button of the wireless router first, and then "Power" followed by "Remote Enable" on the washer within 2 minutes? Is WPS enabled on the router?
6. Does the consumer have the wireless router security enabled? When the consumer set up their router, did they choose a security code? If not, refer them to their router's user instructions and have them set up their security code.
   IMPORTANT: Changing the security code could disable all Internet connections.
7. Can the consumer take their laptop, tablet, or other mobile device to where the washer is to determine that it can still communicate at this range from their router?
   - Can the laptop, tablet, or other mobile device still talk to the Internet? Go to a new website to test for connectivity (not a recent page that may have been cached on their browser).
   - If laptop, tablet, or other mobile device cannot communicate at this range, can it communicate moving closer to the router?
   - Can you move the wireless router closer to the washer by lengthening the wire between the router and the cable, satellite, or DSL modem box?
   - If a Wi-Fi extender is needed, it should be positioned halfway between the Smart Washer and the wireless router.
8. Recycle Power: In short, recycling power to the modem, router, extender (if exists), and computer will solve Internet connection issues 90% of the time-especially if they previously worked.

To properly recycle power, 1) Power down the computer (completely off-not standby or hibernate); 2) Turn off the router and if it exists, the extender; and 3) Turn off the modem.

NOTE: It is best to disconnect the power cable from the modem and router to ensure the power has been removed.

IMPORTANT: Always restart the network in this order: 1) Turn on modem; wait 2 minutes. 2) Turn on router; wait 2 minutes. 3) If using a Wi-Fi extender, turn on and wait 2 minutes. 4) Turn on computer.

9. No Power or Lights on Modem or Router
   - Check that modem and/or router is securely plugged into outlet. Is the outlet controlled by light switch?
   - Check if modem and/or router is plugged into power strip. Verify that power strip is plugged in and switched ON.
   - Try a different electrical outlet.
   - If the user is still not seeing any lights, have the customer contact the modem or router manufacturer's help desk.
10. Interference from outside the home may be causing the problem. Wait several minutes and retry. If possible, place the wireless router closer to the washer or install a Wi-Fi range extender.

Troubleshooting the Smart Washer – Not Able to Make Connection to Home Router

1. If the Wi-Fi icon is not solid white when the washer is on, go to step 2. If it solid white the washer is operating properly and the problem is with the home network.
2. Unplug the washer or disconnect power. Wait 30 seconds, then return power to the washer. Repeat claiming process or Wi-Fi connect process. If unsuccessful, go to step 3.
3. Does the washer operate correctly except for not being able to connect? The connected washer is designed so that it will be completely functional when not connected. If there are other problems with the washer, fix those first before going to step 4.
4. Test the Wi-Fi connection by entering Service Diagnostic Mode and navigating to System Information then Connectivity Status.

For Service Technician Use Only

- Enter Service Diagnostic Mode.
- Navigate to System Information and enter.
- Navigate to Connectivity Status and enter.

View the variety of connection statuses and information: SAID Number, Connected to SSID, RSSI to Customer AP, IP Address, Internet Connection, and connection to broker.

If the unit is not connected correctly to the Wi-Fi, one or all of these statuses will show "N/A."

5. Inspect the Wi-Fi module and wiring.
   - Unplug washer or disconnect power.
   - Remove console to expose the HMI.
   - Verify that all connectors are inserted all the way into the HMI.

If Washer is Connected to Home Router (Wi-Fi Icon Is On), but Mobile Apps Do Not Work

1. Determine if the washer is connected to the WCloud. This is the external network connection that is made via the Internet. This connection has to be made in order for the Mobile App functions to work.
   - Is either Smart Grid icon on continuously? If yes, the washer is connected to WISE.
   - If they are off, press the CONNECT button to turn the Smart Grid feature on.
   - If the blue Smart Grid icon is blinking, the washer is not connected to the WISE network. The washer is behaving properly.
   - Have the consumer's mobile apps ever worked? If not, the product registration and claiming steps have not been completed properly. Refer the consumer to the Use and Care Guide.
   - Can the consumer access the Internet on their home computer(s)?
     - If no, have the consumer contact their Internet service provider.
     - If yes, have the consumer go through the registration and claimingprocess again, as described in the Use and Care Guide.

If the Washer Fails an Over the Air Update (OTA)

The washer software can be updated remotely through Wi-Fi with an OTA update. If the internet connection is lost during this process, the update may be incomplete.

1. Remove the console to access the ACU and HMI.
2. Does the ACU and HMI have green status LEDs on?
   - If the machine is powered and the status LEDs are off, the OTA update may have failed. Go to step 3.
   - If the status LEDs are on, the machine should the software update was successful.
3. Request an OTA update through the mobile app.

Replacement Procedure – Wi-Fi Module

The replacement of an HMI will include a new Wi-Fi module will have a new Smart Appliance ID (SAID). A new label will be included for the technician to place on the washer over the original label. Claiming will have to be repeated as explained in "Claiming the Washer" as well as in the Use and Care Guide.

Detailed instructions will also be included with the replacement part.

Control Panel Indicator Lights for Connected Washer

LCD Icon	LCD Status	Indication
Wi-Fi Connect	OFF	• Connection not made to home router or access point (AP). This will occur when washer is not claimed and not commanded to be claimed, as well as when Wi-Fi has been turned off. -OR- • Washer in standby mode.
Wi-Fi Connect	ON	• Connection made to home router or access point (AP).
Wi-Fi Connect	Pregressing	• Connecting to home router or access point (AP).
Remote Start	OFF	• Remote control functionality is OFF.
Remote Start	ON	• Remote control functionality is ON.

For Service Technician Use Only
Component Location

For Maytag® Belt Drive Models

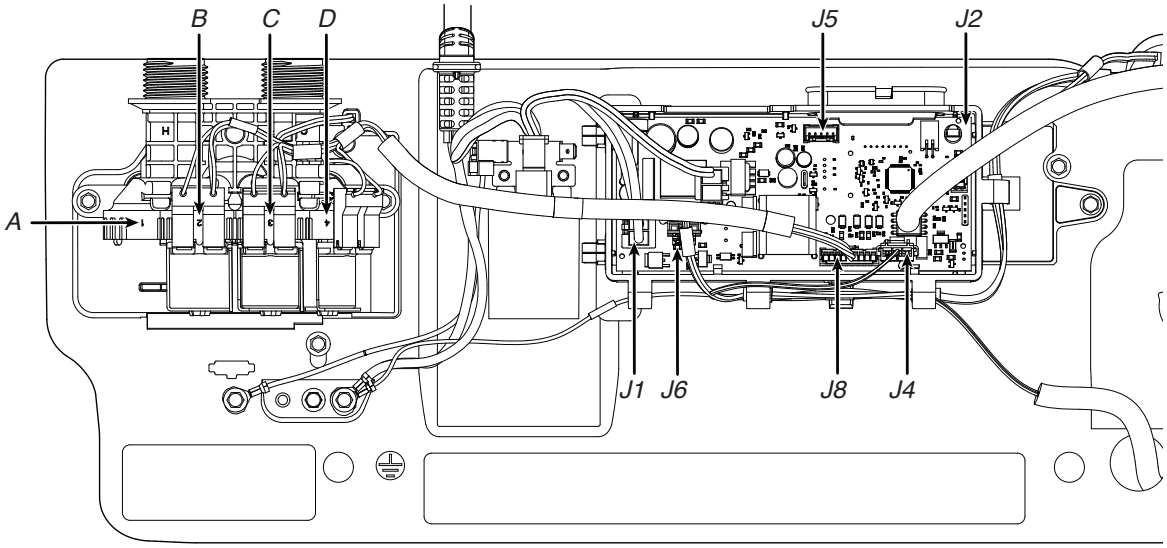

Figure 1 - Main Control (ACU)

A. Bleach/Oxi Valve
B. Hot Water Valve
C. Cold Water Valve
D. Fabric Softener valve

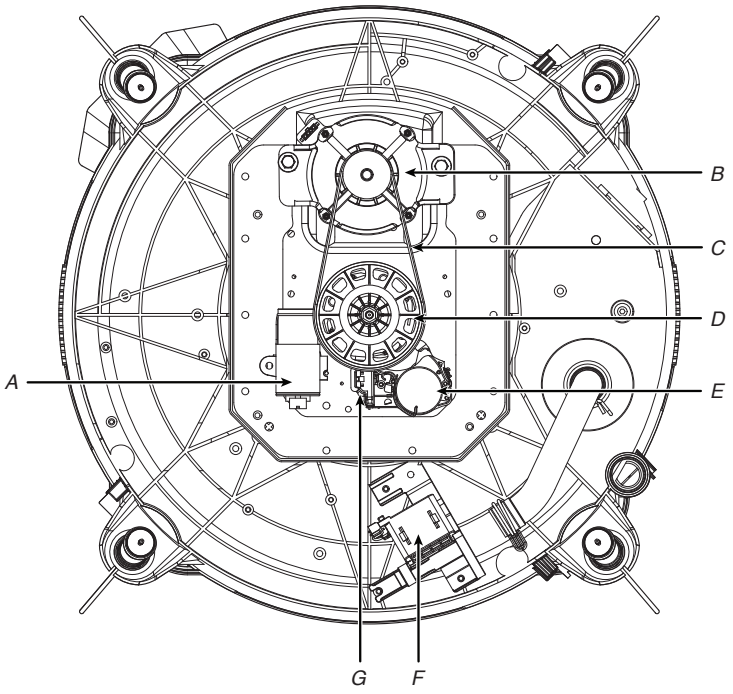

Figure 2 - Bottom View - PSC

A. Run Capacitor
B. PSC Motor Connector
C. Drive Belt
D.Shaft Pulley
E. Shifter Assembly
F. Drain Pump
G. Shifter Assembly Connector

For Service Technician Use Only

For Whirlpool® Belt Drive Models

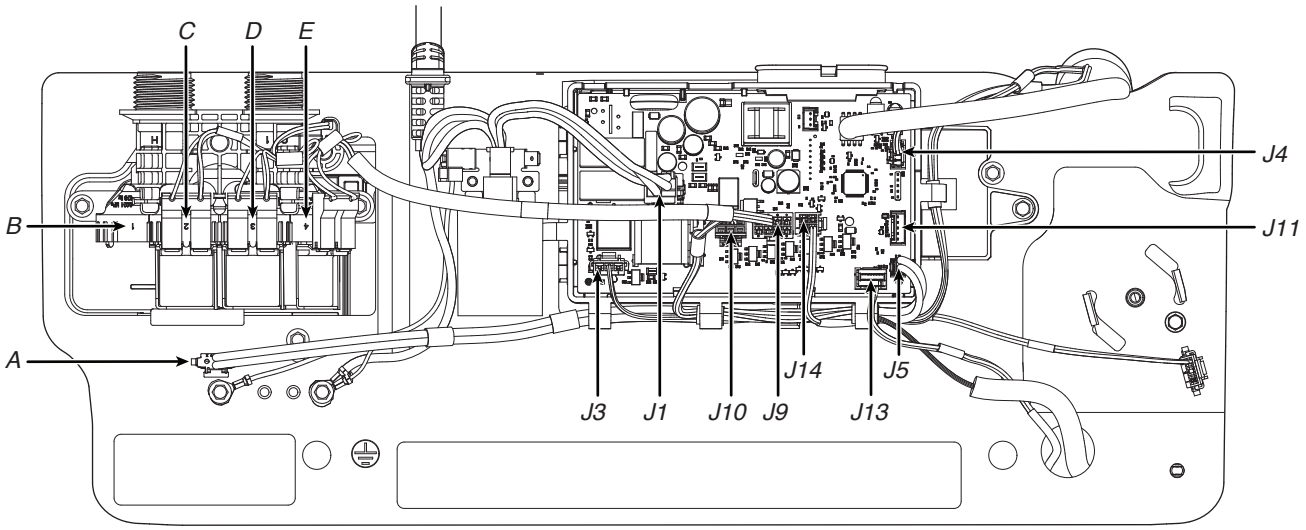

Figure 3 - Main Control (ACU)

A. Faucet Switch Connector
B. Bleach/Oxi Valve
C. Hot Water Valve
D. Cold Water Valve
E. Fabric Softener valve

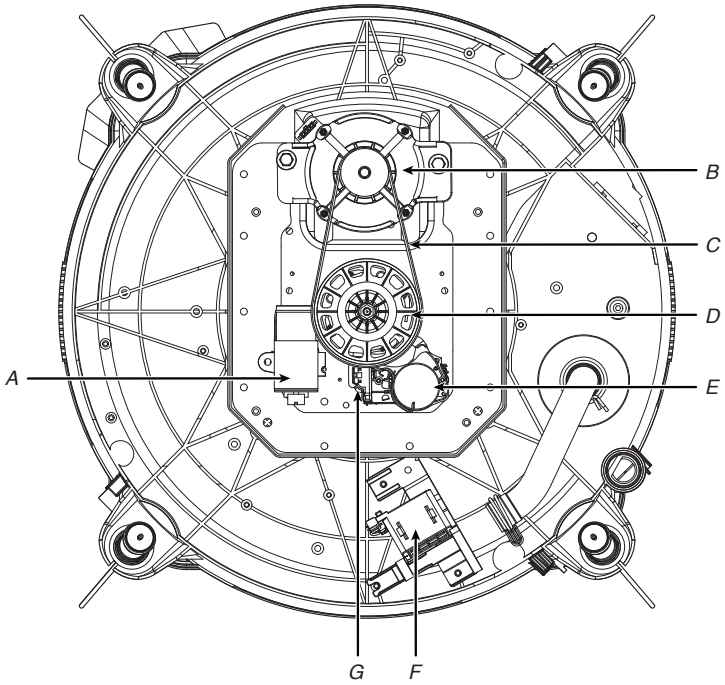

Figure 4 - Bottom View - PSC

A. Run Capacitor
B. PSC Motor Connector
C. Drive Belt
D.Shaft Pulley
E. Shifter Assembly
F. Drain Pump
G. Shifter Assembly Connector

For Service Technician Use Only

For Whirlpool® and Maytag® Direct Drive Models

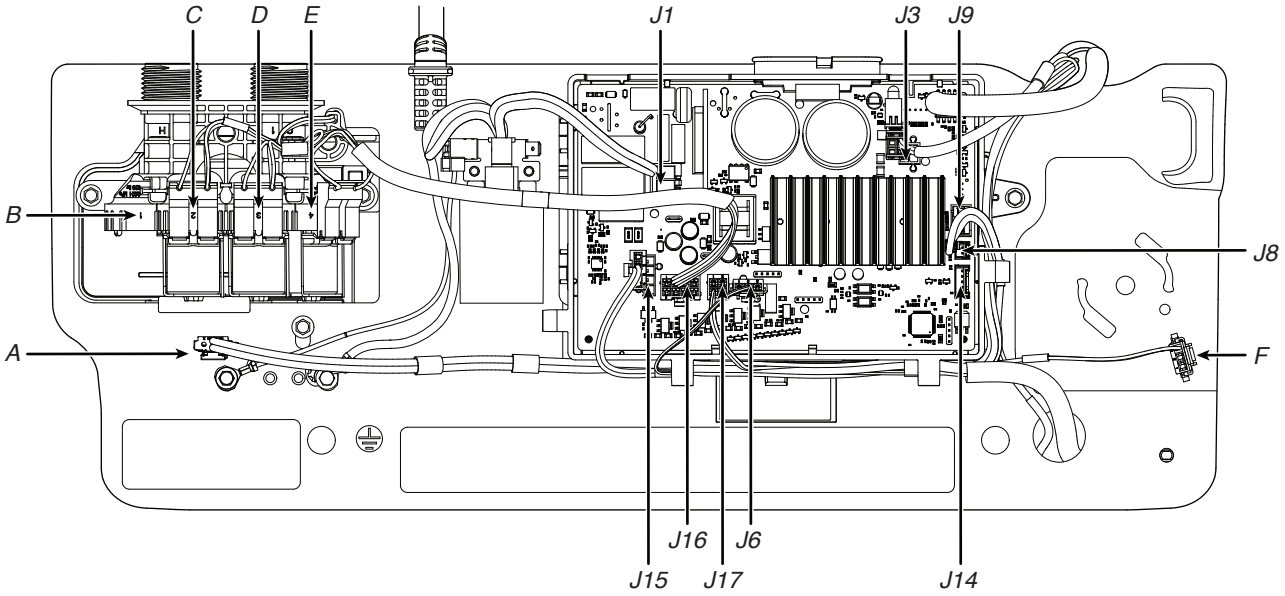

Figure 5 - Main Control (ACU)

A. Faucet Switch Connector
B. Bleach/Oxi Valve
C. Hot Water Valve
D. Cold Water Valve
E. Fabric Softener valve
F. Bulk Pump Connector

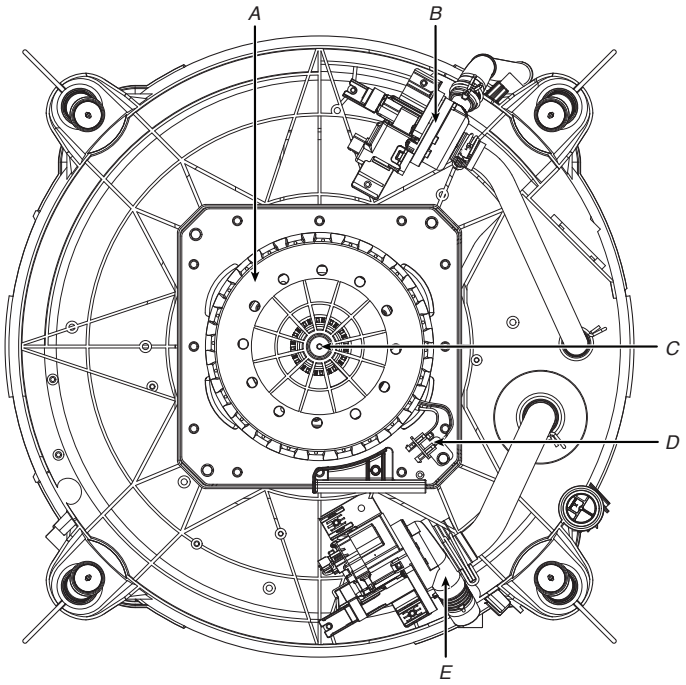

Figure 6 - Bottom View - BPM

A. Motor Cover
B. Recirculation Pump
C. Motor Bolt
D. Motor Shifter Connector
E. Drain Pump

Multimedia Enhanced

Section 4: Component Access

This section provides service parts access, removal, and replacement instructions for the "Whirlpool® and Maytag® 4.7/5.3 cu ft Top Load Washer."

- Top Load Console Removal
- Removing the User Interface (UI)
- Removing the Water Inlet Valve
- Removing the Main Control
- Removing the Bulk Dispenser (Only On Certain Models)
- Removing the Tub Ring, Impeller, and Basket
- Removing the 2 in 1 Agitator (For Applicable Models Only)
- Removing the Motor and Drive Assembly (Direct Drive Models)
- Removing the Pumps (Direct Drive Models)
- Removing the Lid Lock
- Removing the Lid and a Hinge
- Removing the Shifter (Belt-Driven Models)
- Removing the Drain Pump (Belt-Driven Models)
- Removing the Drive Belt and Motor (Belt-Driven Models)
- Removing the Splutch (Belt-Driven Models)
- Removing the Gearcase (Belt-Driven Models)

Video Available Look for this icon through out Section 4.

Top Load Console Removal

WARNING

Electrical Shock Hazard

Disconnect power before servicing.

Replace all parts and panels before operating.

Failure to do so can result in death or electrical shock.

1. Unplug washer or disconnect power.
2. Turn off the water supply to the washer.
3. Remove two (2) 1/4" hex-head/ T20® TORX®† screws from the rear of the console.

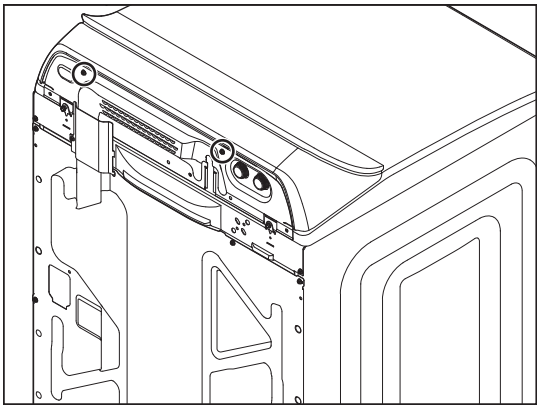

4. Raise the Lid.
5. While pushing back and up on the console, slide thin plastic putty knife (or thin plastic cake knife) between the console and Top Panel.

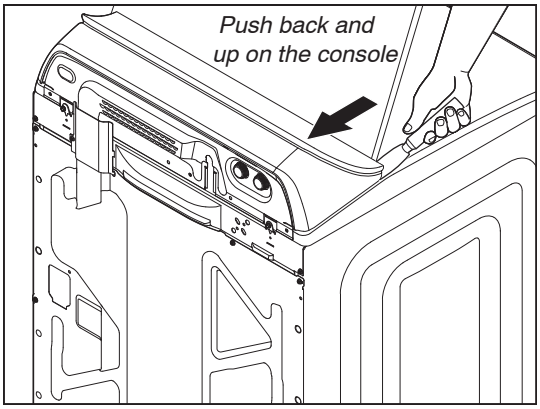

6. Depress the console clip by pushing straight back with the putty knife while lifting the console to separate from the Top Panel.

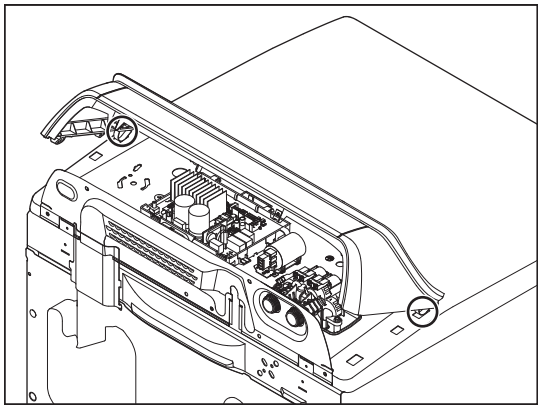

7. Close the lid.
8. Tilt console forward to access.

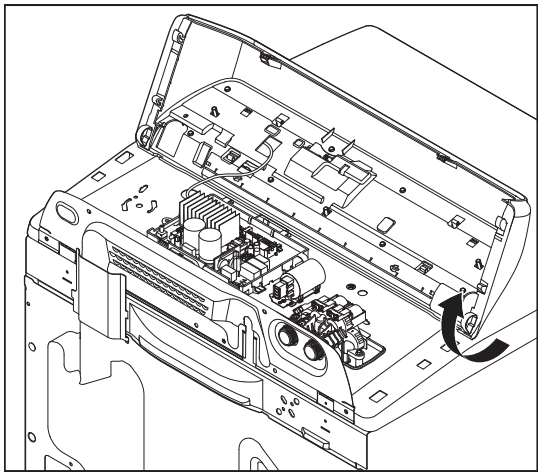

†®Torx and T20 are registered trademarks of Acument Intellectual Properties, LLC.

Removing the User Interface (UI)

⚠ WARNING

Electrical Shock Hazard

Disconnect power before servicing.

Replace all parts and panels before operating.

Failure to do so can result in death or electrical shock.

NOTE: See video from section Top Load Console Removal for more information on removing the User Interface.

1. Unplug washer or disconnect power.
2. Complete the steps 1-8 from section Top Load Console Removal.
3. Disconnect the 3-wire UI harness from the ACU by depressing the tab and lifting it.

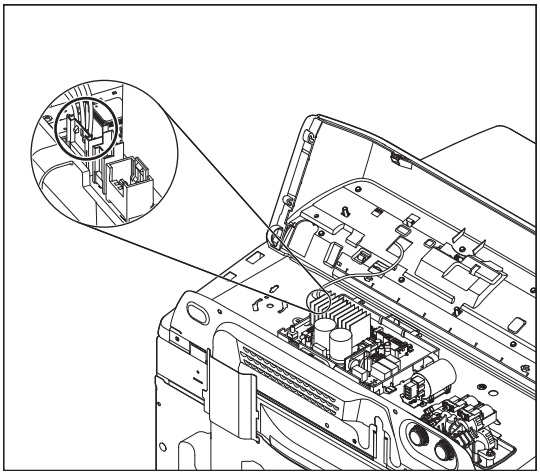

4. Remove the eight (8) 1/4" hex-head screws securing the UI to the console.

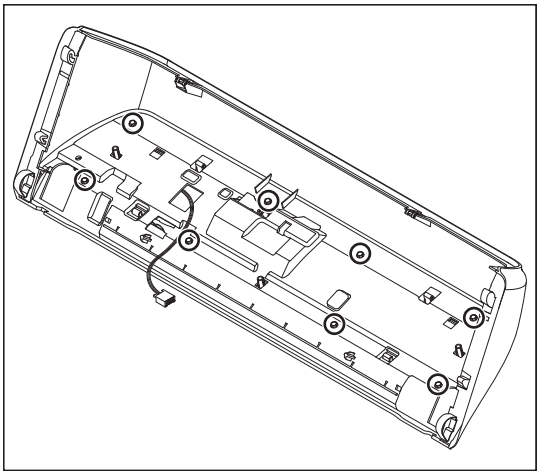

5. Using a flat blade screwdriver, gently, depress the four plastic mounting clips to release the UI from console.

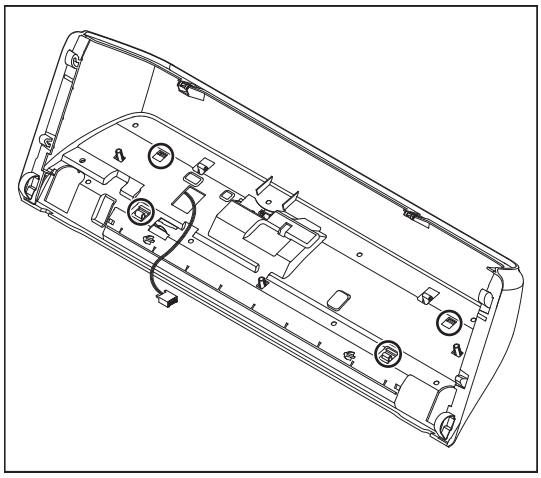

6. Lift the console shell and remove from UI to access.

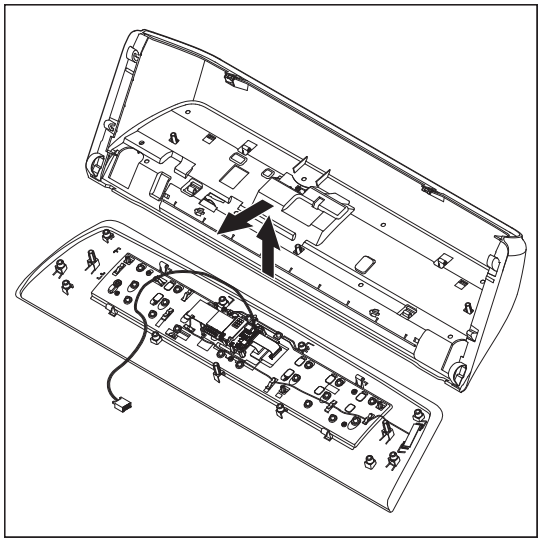

REASSEMBLY NOTE: When reinstalling the User Interface to the console, only hand tighten the eight (8) hex-head screws until snug. Using a power driver will strip the screw holes and stress the capacitive touch user interface.

Removing the Water Inlet Valve

WARNING

Electrical Shock Hazard

Disconnect power before servicing.

Replace all parts and panels before operating.

Failure to do so can result in death or electrical shock.

NOTE: The water inlet valve is replaced as an assembly, which includes all four valves, bracket, and valve assembly harness.

1. Unplug washer or disconnect power.
2. Turn off the water supply to the washer.
3. Disconnect hot and cold inlet water hoses.
4. Complete the steps 1-8 from section Top Load Console Removal.
5. Disconnect the Water Inlet Valve connector from the ACU (connector varies depending on model, features, and control board).

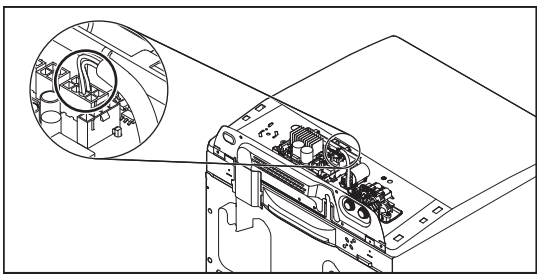

6. Using a 1/4" nut driver, remove the two (2) hex-head screws (one on each side) securing the water inlet valve to the Top Panel of the washer.

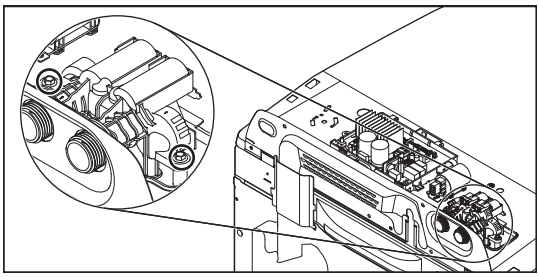

Removing the Main Control

WARNING

Electrical Shock Hazard

Disconnect power before servicing.

Replace all parts and panels before operating.

Failure to do so can result in death or electrical shock.

NOTE: ACU may vary depending on model number and features.

1. Unplug washer or disconnect power.
2. Turn off the water supply to the washer.
3. Complete the steps 1-8 from section Top Load Console Removal.
4. Remove pressure hose from ACU.
5. Disconnect all connectors from the ACU.

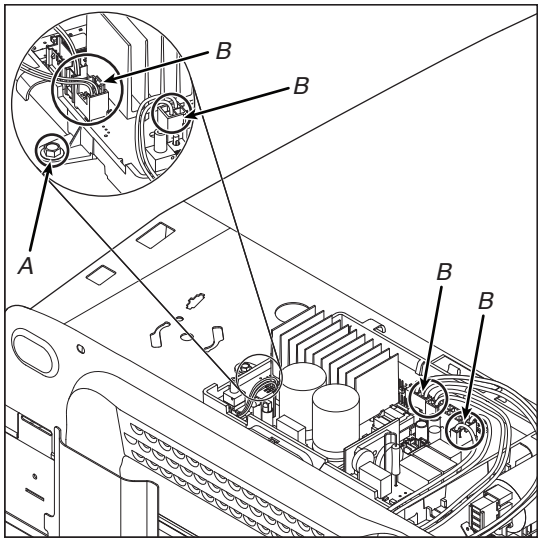

A. ACU Screw B. ACU Connectors

6. Using a 1/4" nut driver, remove the hex-head screw securing the ACU to the Top Panel of the washer as shown in above figure. Slide ACU to the left and lift to remove.

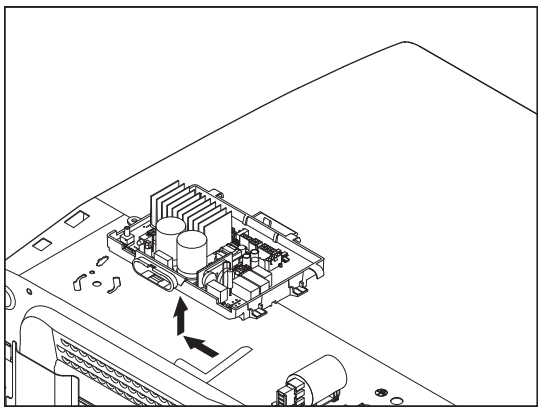

Removing the Bulk Dispenser (Only on Certain Models)

⚠ WARNING

Electrical Shock Hazard

Disconnect power before servicing.

Replace all parts and panels before operating.

Failure to do so can result in death or electrical shock.

1. Unplug washer or disconnect power.
2. Turn off the water supply to the washer.
3. Complete the steps 1-8 from section Top Load Console Removal.
4. Using a 1/4" nut driver remove the ACU screw and slide ACU to the left.
5. Remove 1/4" screw as shown in below figure.
6. Push in on harness retainer and lift to disconnect bulk dispense reed switch harness.

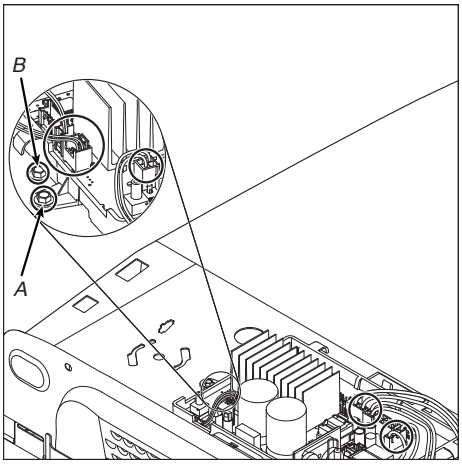

A. ACU Screw *B.Dispenser Housing Screw*

7. Remove 1/4" screw as shown in below figure.

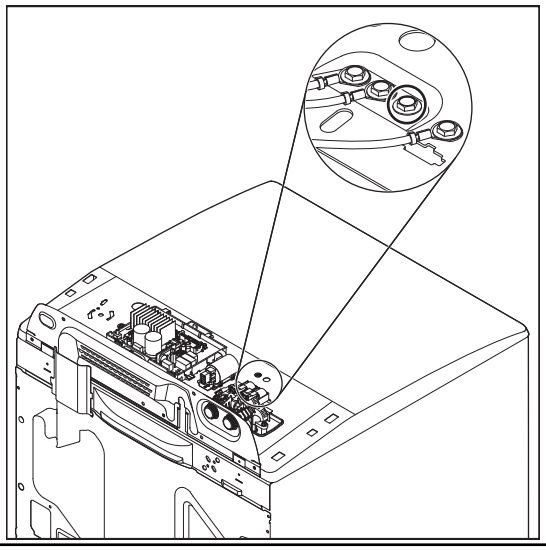

8. Remove inlet valve assembly by removing two (2) 1/4" screws and disconnecting valve harness from ACU. Lift the valve assembly and remove from dispenser housing.

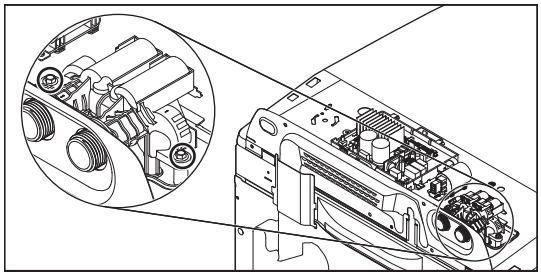

9. Complete the steps 1-8 from section Lifting the Top Panel.
10. Lift the bulk drawer and remove it from housing.

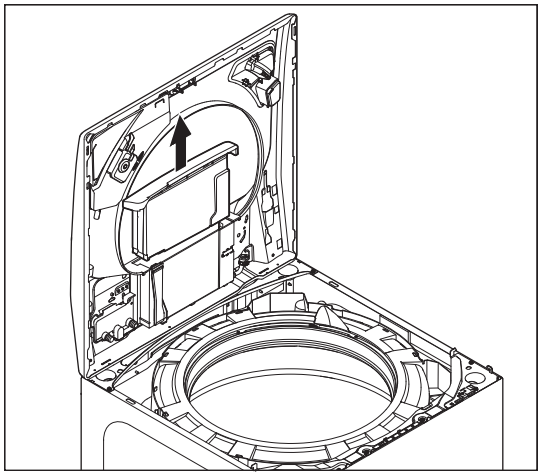

11. Remove two (2) 1/4" screws holding dispenser housing to bezel.

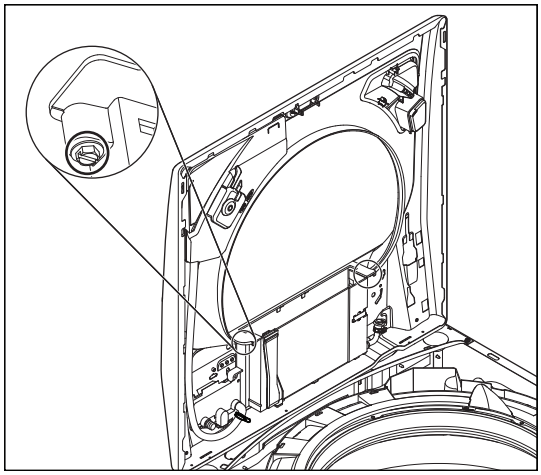

12. Using pliers, disconnect fabric softener hose clamp as shown in below figure.

13. Using pliers, disconnect two (2) hose clamps at bulk dispenser pump as shown in below figure.

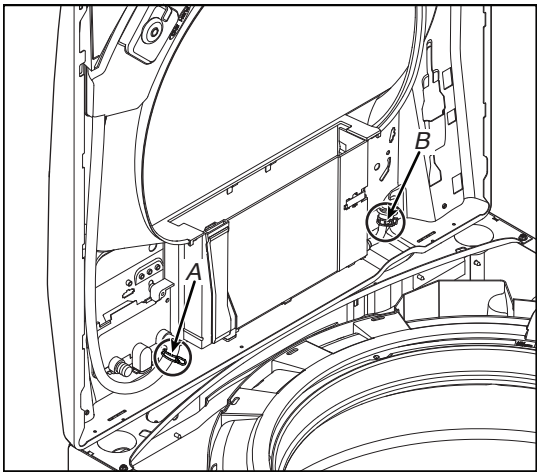

A. Fabric Softener Hose Clamp

B. Clamps at Bulk Dispenser Pump (2)

14. Bulk dispenser housing can now be removed and replaced.

15. To remove reed switch only use a small screwdriver to push in on tabs and slide to the right.

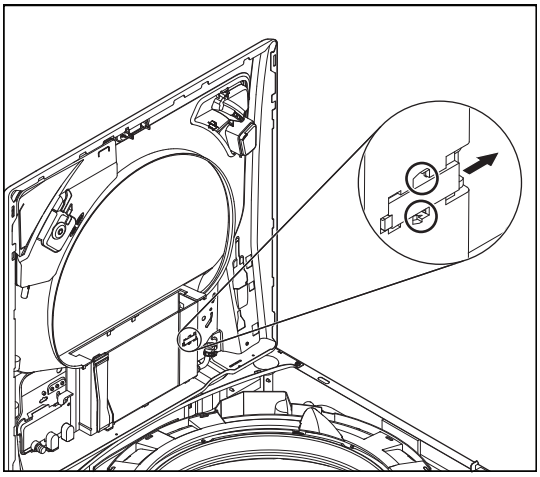

Removing the Tub Ring, Impeller, and Basket

WARNING

Electrical Shock Hazard

Disconnect power before servicing.

Replace all parts and panels before operating.

Failure to do so can result in death or electrical shock.

Lifting the Top Panel

1. Unplug washer or disconnect power.
2. Turn off water supply to washer.
3. Disconnect hot and cold inlet water hoses.
4. Tape lid down.
5. Remove three (3) 1/4" hex-head mounting screws from the rear of the console as indicated. Remove harness cover and set aside.

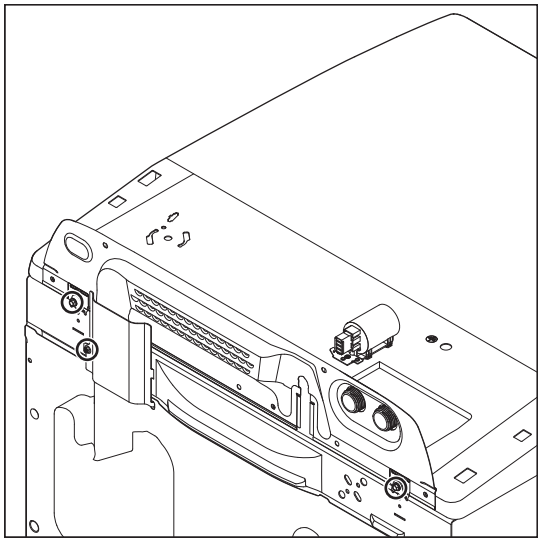

6. Slide the Top Panel forward about 1/2" (12.7 mm).

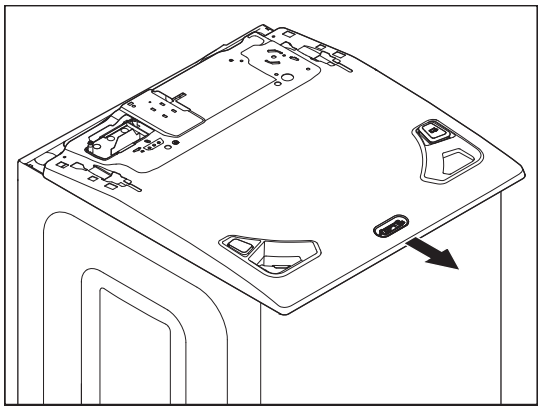

7. Raise the Top Panel about 1/4" (6.3 mm). While keeping it lifted, push the Top Panel back about 1/4" (6.3 mm).

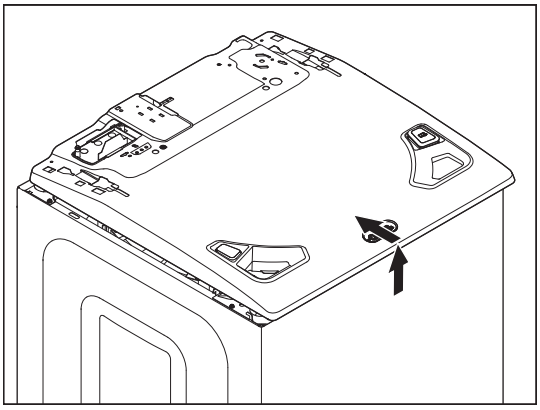

8. Tilt the Top Panel up and make sure that the rear tabs slide into the slots as shown in below figure.

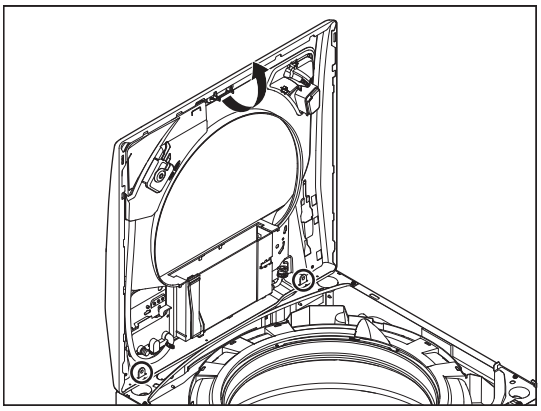

Removing the Tub Ring

NOTE: Due to the increase in size and depth of the tub ring, the working space between the tub ring and side panel is very limited.

1. Disconnect recirculation hose from tub ring.

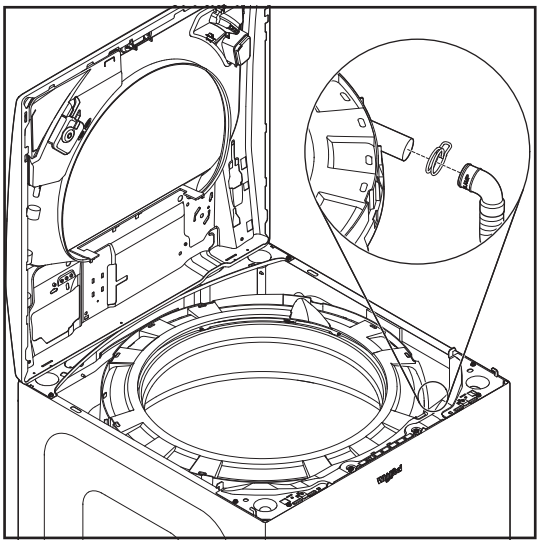

2. Locate the six (6) tub ring clips as shown in below figure. Unclip each clip with a “stubby” flat blade screwdriver.

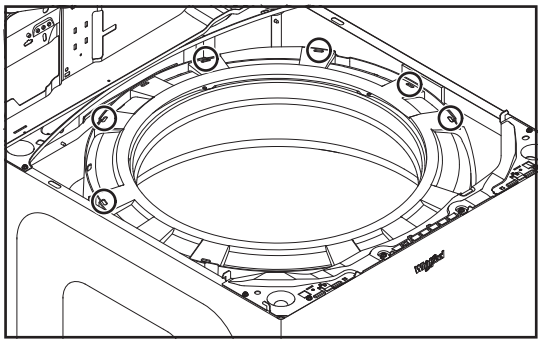

3. Lift the left-rear suspension rod and disconnect it from the rear brace. This will allow more room to access the two clips located on both sides of the bleach well. Remove tub ring from washer.

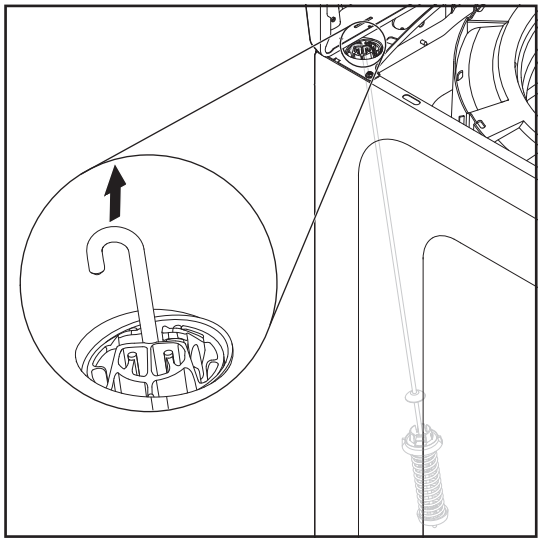

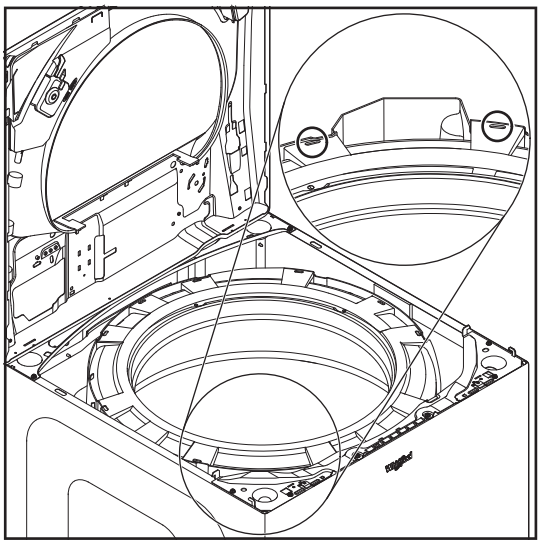

Removing the Impeller

To Remove the Impeller Cap

1. Insert the blade from a small screwdriver into the slot in the impeller cap, pry the cap up and remove.

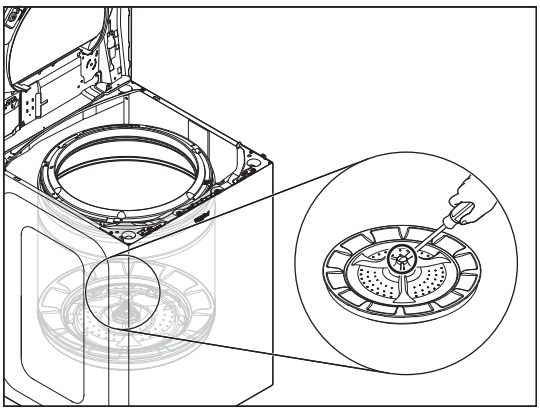

Removing the Impeller Cap of 2 in 1 Agitator Models:

1. Complete the steps 1-6 from Removing the 2 in 1 Agitator (For Applicable Models Only).
2. Insert screwdriver vertically into one of the two holes.

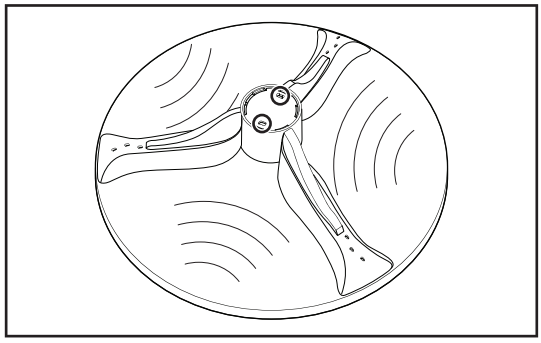

3. Use the blade of the screw driver to flex the leg outward to unsnap one side.

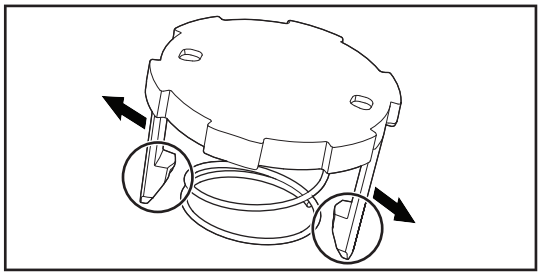

4. Repeat above steps 1-2 with the other hole/leg and then, remove the cap (this can also be done simultaneously with two small screw drivers).

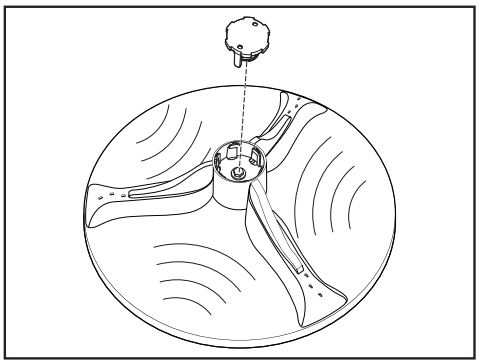

To Remove the Impeller

5. Remove the 7/16" hex-head bolt from the impeller, then lift and remove the impeller from the basket.

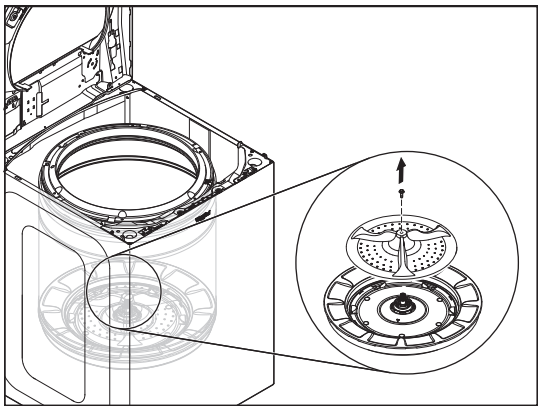

REASSEMBLY NOTE: Any time the impeller bolt is removed, Loctite® adhesive (Threadlocker Blue 242® or similar adhesive) must be reapplied, otherwise the bolt will eventually work itself loose resulting in a second call.

Removing the Basket

1. Using a spanner/wrench and hammer, tap wrench with hammer until nut becomes loose. Remove spanner nut.

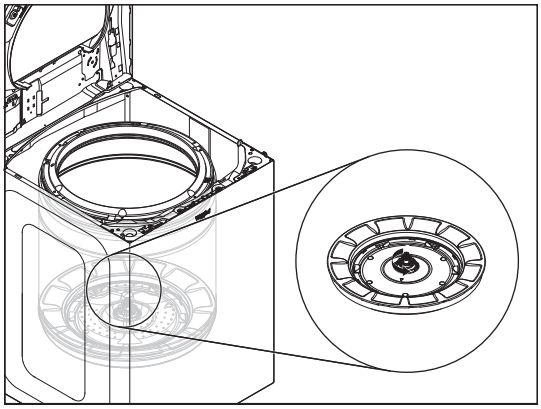

2. Lift the basket out of the washer.

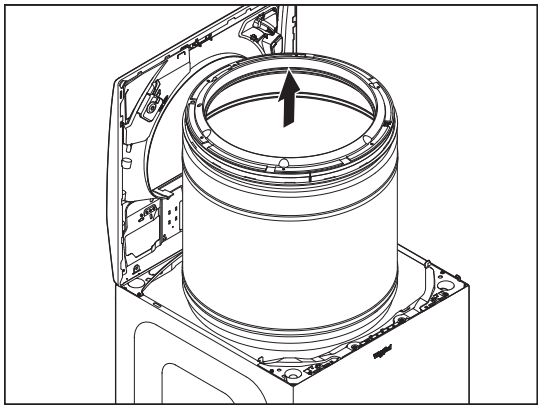

REASSEMBLY NOTE: When re-installing the basket, screw on spanner nut until it is finger tight. Then, using a mallet or hammer, tighten an additional 3/4 turn (see below figure). Do NOT apply Loctite® to spanner nut. Applying Loctite® to the spanner nut will make it virtually impossible to remove again.

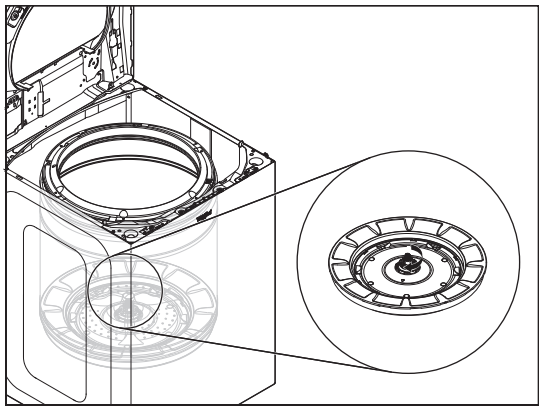

Removing the 2 in 1 Agitator (For Applicable Models Only)

1. Unplug washer or disconnect power.
2. Turn off the water supply to the washer.
3. Raise the Lid.
4. Squeeze handle.

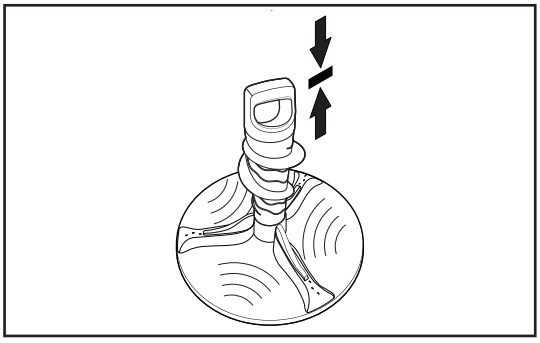

5. Rotate the handle counterclockwise.

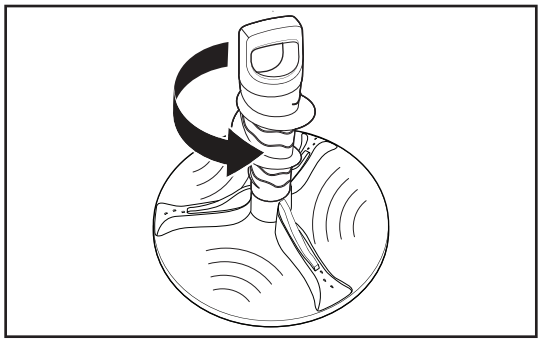

6. Lift up the handle to remove.

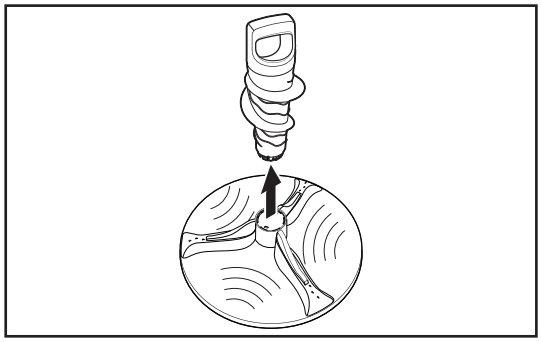

Removing the Motor and Drive Assembly (Direct Drive Models)

WARNING

Electrical Shock Hazard

Disconnect power before servicing.

Replace all parts and panels before operating.

Failure to do so can result in death or electrical shock.

WARNING

Excessive Weight Hazard

Use two or more people to move and install washer.

Failure to do so can result in back or other injury.

Preparation

1. Unplug washer or disconnect power.
2. Turn off water supply to washer.
3. Disconnect hot and cold inlet water hoses and remove the drain hose from the standpipe or laundry tub.
4. Tape the washer lid closed.
5. Carefully lay the washer on its back panel. Place padding on the floor to protect the surfaces.
6. Remove sound padding and set aside.

Removing the Rotor, Clutch Coil, and Stator

1. Use a 4 mm Allen wrench to remove the rotor mounting screw as shown in below figure. Rock the rotor back and forth until the rotor has been pulled away from the stator.

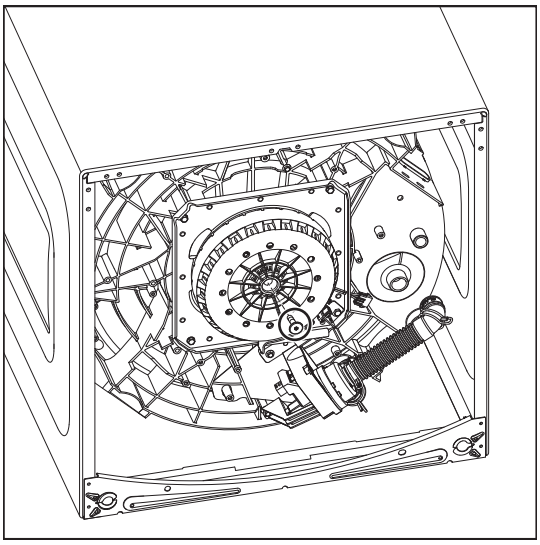

2. Unplug the clutch coil and stator connectors. Remove all connectors from the bracket.

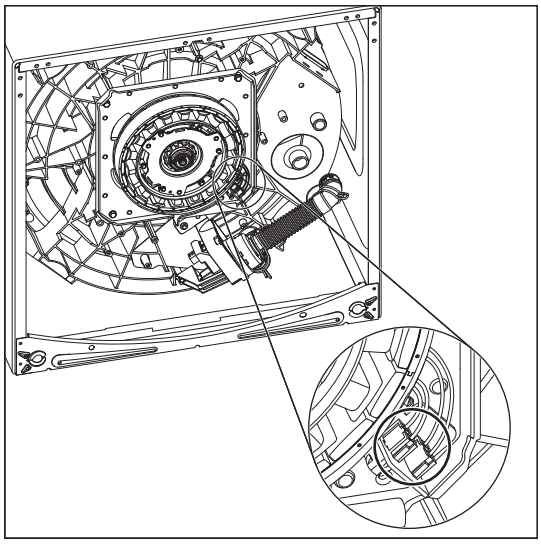

3. Use a 7 mm socket to remove the three (3) clutch coil mounting screws and the three (3) stator mounting screws. Remove and set aside both the stator and clutch coil assembly.

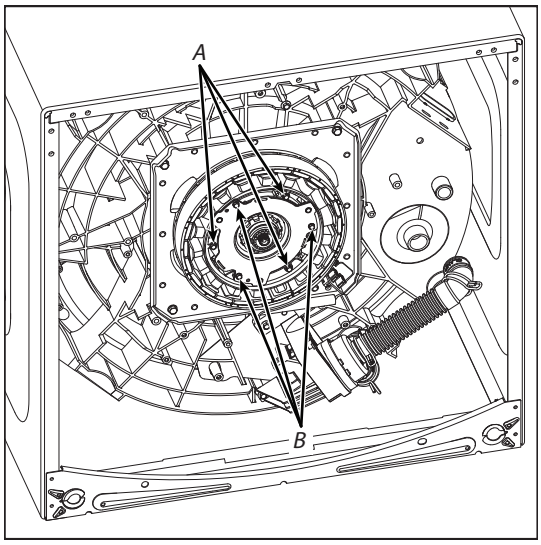

A. Stator Screws

B. Clutch Coil Mounting Screws

Removing the Clutch (Slider) Assembly

1. To remove the spiral retaining ring, locate the overlap of the spiral ring and use a small flat blade screwdriver to pry the ring off of the shaft.

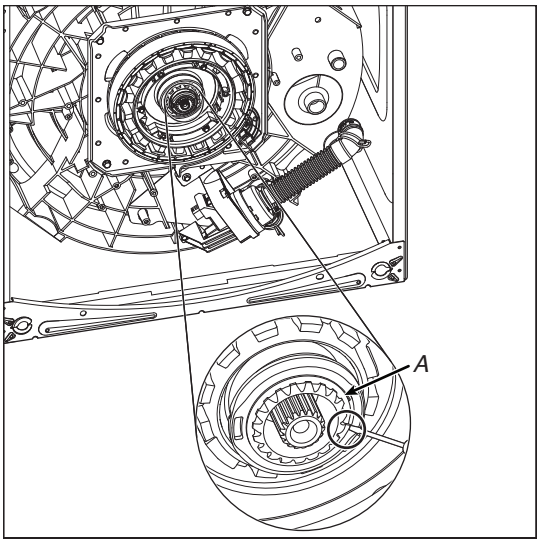

A. Retaining Ring

2. Remove the Clutch Spring, and then the Clutch (Slider).

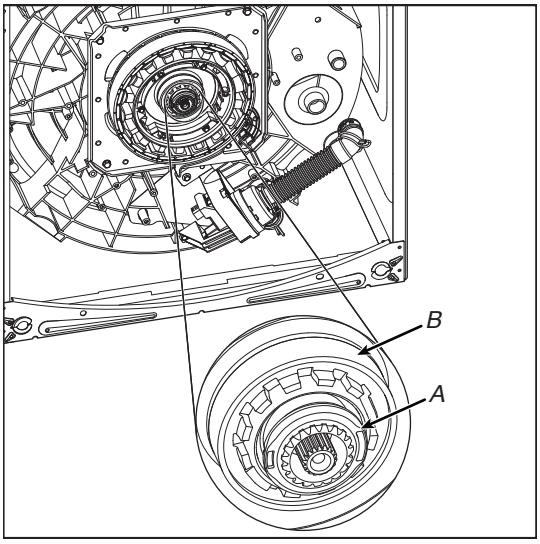

A. Clutch Spring B.Clutch (Slider)

Removing the Drive Assembly

1. Use a 1/4" socket to remove the hex-head screw securing the ground wire to the drive assembly.
2. Use a 10 mm socket to remove the four (4) screws securing the drive assembly to the tub (refer figure 1). (The bottom right screw also secures the connector clip to the drive assembly). The drive assembly can now be pulled away from the tub.

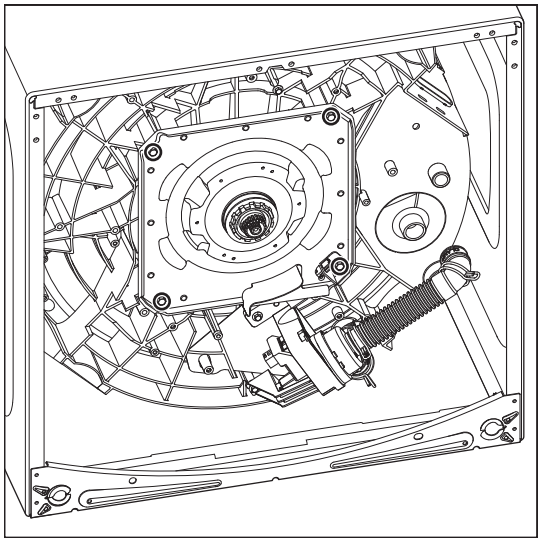

Figure 1

NOTE: If the drive assembly cannot easily be pulled from the tub, it may be necessary to tap on the drive assembly from inside the tub to loosen the drive from the tub.

IMPORTANT REASSEMBLY NOTES

REASSEMBLY NOTE: When you reinstall the rotor over the stator assembly, do not grip the rotor housing around the rear edge with your fingers. The magnets around the rotor housing are very strong, and they will pull the rotor into the stator coil magnets when the rotor magnets come within their magnetic field. Keep your fingers along the outside of the rotor housing and away from the rear edge when you are installing it on the stator assembly.

REASSEMBLY NOTE: Any time the rotor bolt is removed, Loctite® adhesive (Threadlocker Blue 242® or similar adhesive) must be reapplied, otherwise the bolt will eventually work itself loose resulting in a second call.

REASSEMBLY NOTE: The four (4) drive assembly screws are threaded into the bottom of the plastic tub (see Figure 1 below). Using a power driver to tighten the screws may strip the holes. Tighten only by hand until very snug.

REASSEMBLY NOTE: The harness guide routes the harness away from moving drive components (rotor). Be sure to reinstall the guide anytime it is removed.

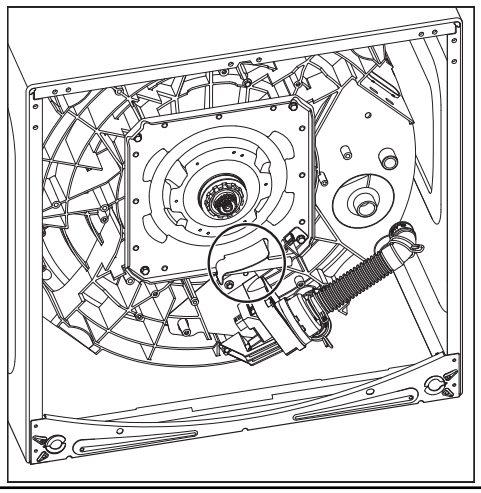

Removing the Pumps (Direct Drive Models)

WARNING

Electrical Shock Hazard

Disconnect power before servicing.

Replace all parts and panels before operating.

Failure to do so can result in death or electrical shock.

WARNING

Excessive Weight Hazard

Use two or more people to move and install washer.

Failure to do so can result in back or other injury.

Preparation

1. Unplug washer or disconnect power.
2. Turn off water supply to washer.
3. Disconnect hot and cold inlet water hoses and remove the drain hose from the standpipe or laundry tub.
4. Tape the washer lid closed.
5. Carefully lay the washer on its back panel. Place padding on the floor to protect the surfaces.
6. Remove sound padding and set aside.

Removing the Drain Pump

1. Disconnect harness (two terminals) from drain pump.

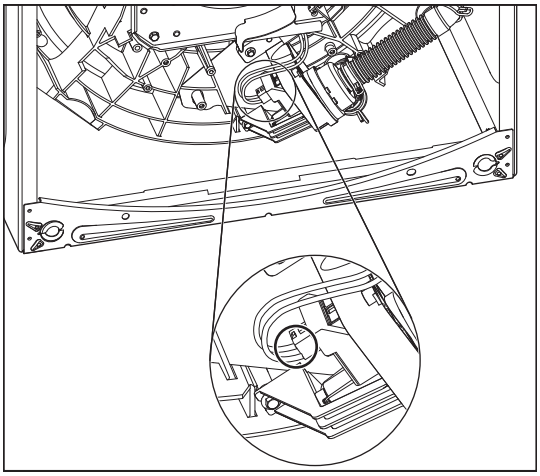

2. Loosen the hose clamps and pull the inlet and outlet drain hoses off the pump. Note that there is a tab on the outlet connector that fits into a slot in the hose.

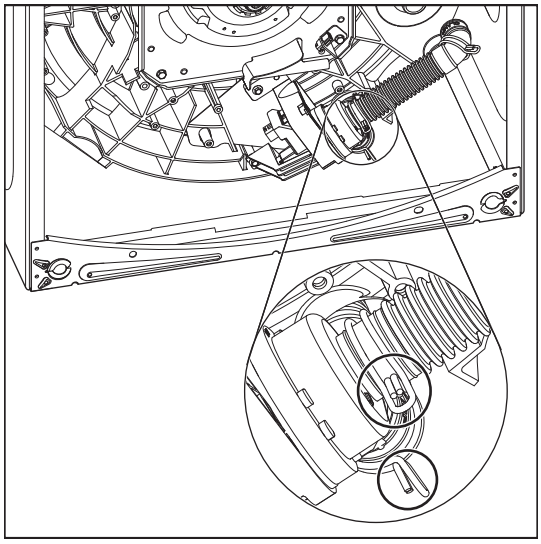

3. Remove the three (3) 8 mm hex-head screws from the drain pump and remove the pump from the tub.

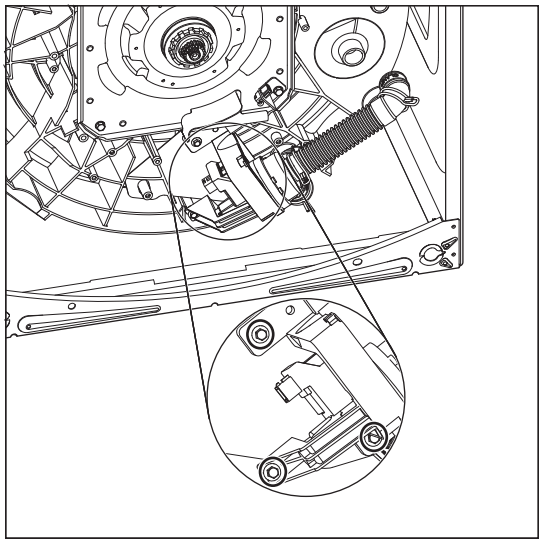

Removing the Recirculation Pump

1. Disconnect harness (two terminals) from recirculation pump.

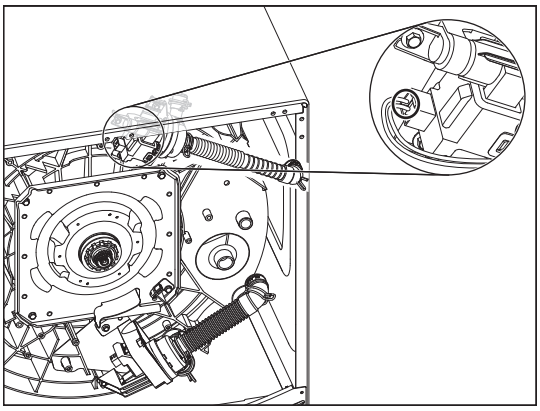

2. Loosen the hose clamps and pull the inlet and outlet drain hoses off the pump. Note that there is a tab on the outlet connector that fits into a slot in the hose.

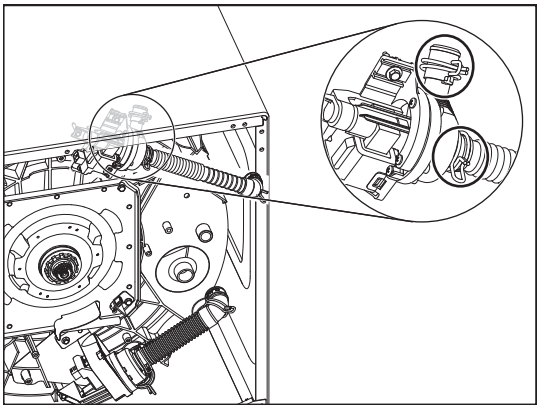

3. Remove the three (3) 8 mm hex-head screws from the drain pump and remove the pump from the tub.

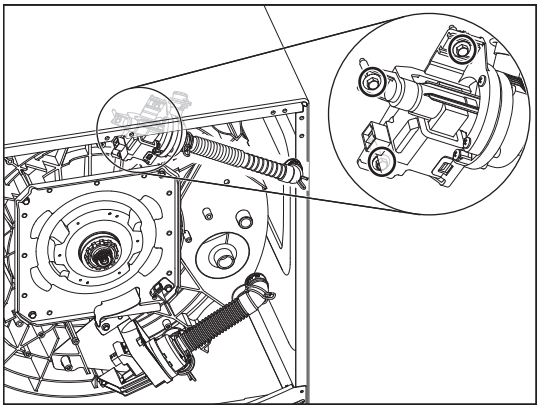

Removing the Lid Lock

⚠ WARNING

Electrical Shock Hazard

Disconnect power before servicing.

Replace all parts and panels before operating.

Failure to do so can result in death or electrical shock.

1. Unplug washer or disconnect power.
2. Turn off water supply to washer.
3. Disconnect hot and cold inlet water hoses.
4. Complete the steps 1-8 from section Top Load Console Removal.
5. Disconnect the Lid Lock connector from the Main Control. (Connector number varies depending on model features).

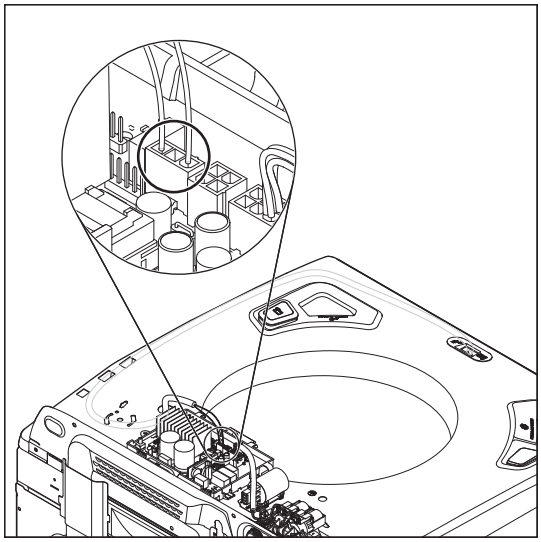

6. Feed the Lid Lock harness through the opening in the washer Top Panel.

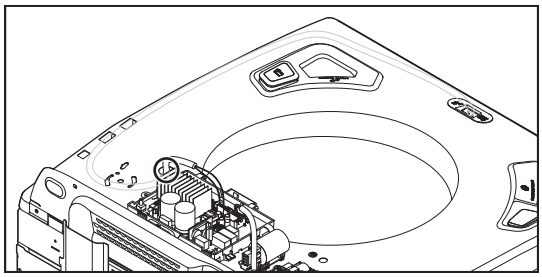

7. Disconnect push-mount clip from Top Panel.

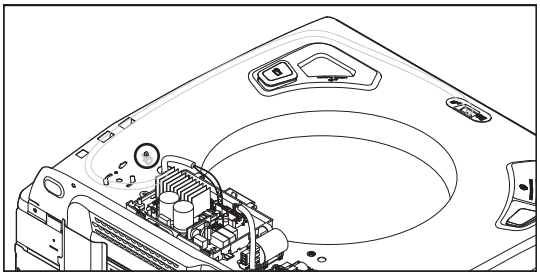

8. Complete the steps 1-8 from section Lifting the Top Panel.
9. Remove the Lid Lock harness from the clips on right side of Top Panel as shown in below figure.

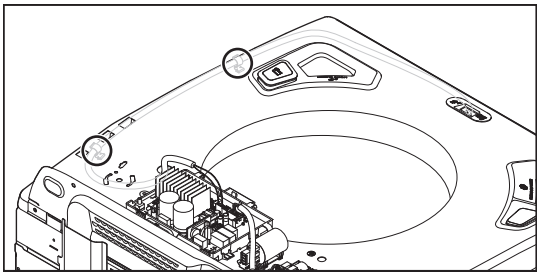

Removing the Lid Lock Bezel

10. Unclip the Lid Lock bezel from the Lid Lock and push bezel up to remove.

Removing the Lid Lock

11. Remove the Lid Lock from the Top Panel by pressing down on the tab as shown in below figure.

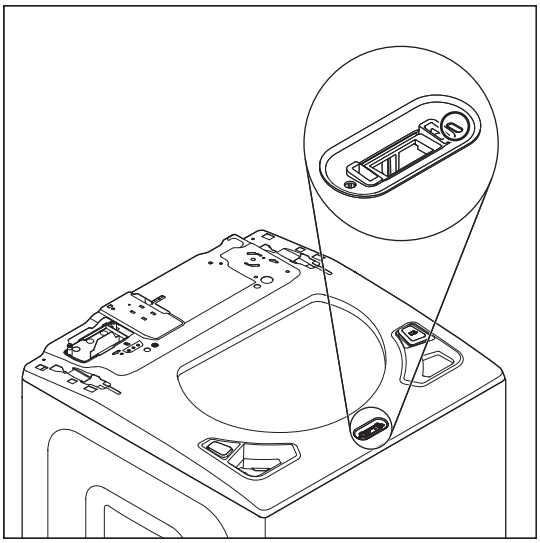

12. Slide the lid lock to the left and then down to remove.

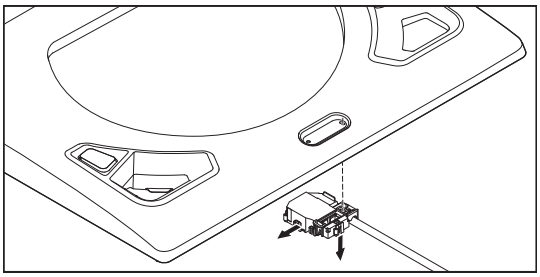

Removing the Lid and a Hinge

Glass Lid Removal

NOTE: The lid strike is a one time only use part. Do not remove. Click on this icon to see video of Lid Strike.

1. Remove the four TORX T20 screws holding the lid to the hinges.

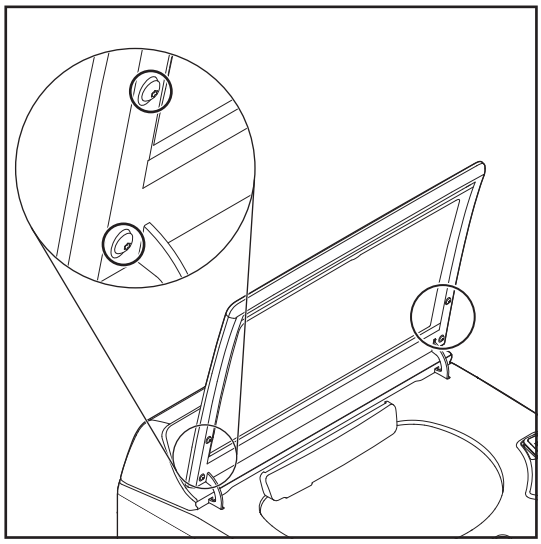

2. Lift the lid up and off of the hinges.

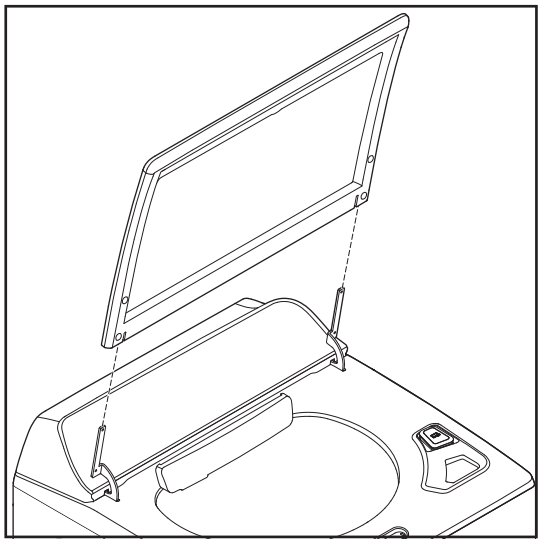

Top Load Washer Hinge Removal

WARNING

Electrical Shock Hazard

Disconnect power before servicing.

Replace all parts and panels before operating.

Failure to do so can result in death or electrical shock.

1. Complete the steps 1-8 from section Top Load Console Removal.
2. Complete the steps 1-2 from section Glass Lid Removal.
3. Remove the 1/4" hex head screw holding the hinge in place.

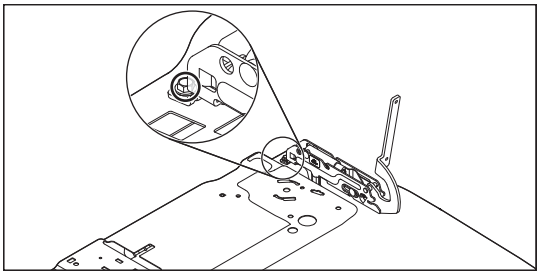

4. Slide the hinge back and lift it to remove.

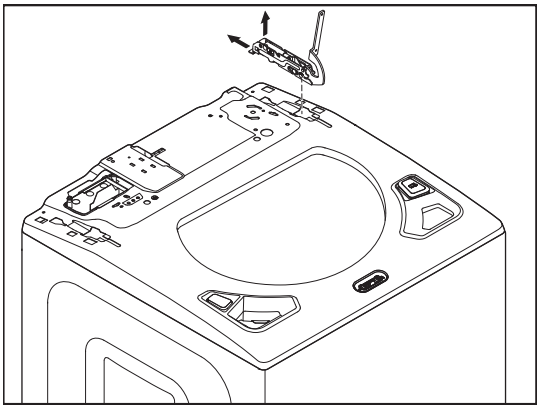

Removing the Shifter (Belt-Driven Models)

WARNING

Electrical Shock Hazard

Disconnect power before servicing.

Replace all parts and panels before operating.

Failure to do so can result in death or electrical shock.

WARNING

Excessive Weight Hazard

Use two or more people to move and install washer.

Failure to do so can result in back or other injury.

1. Unplug washer or disconnect power.
2. Turn off the water supply to the washer.
3. Use cardboard or padding to lay washer on the front cabinet.
4. Remove the two mounting screws and then remove the pulley cover.

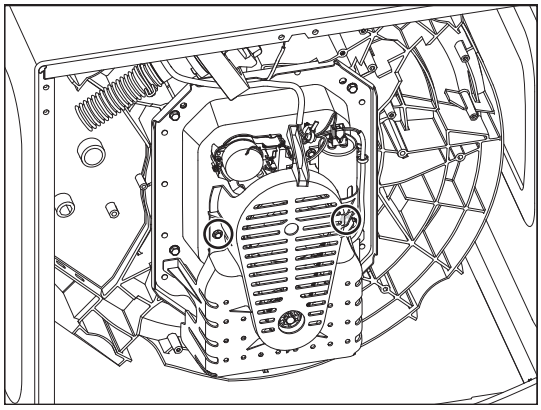

5. Remove the harness from the shifter.

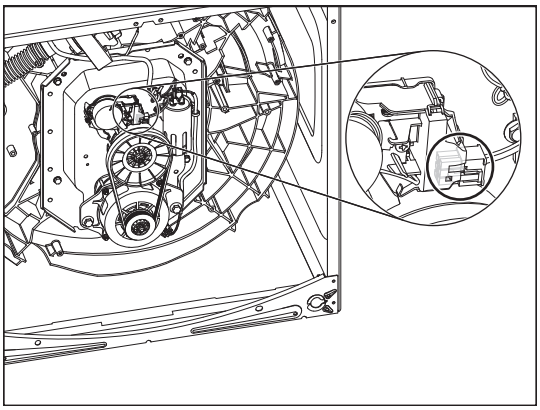

6. Remove the two mounting screws as shown in below figure.

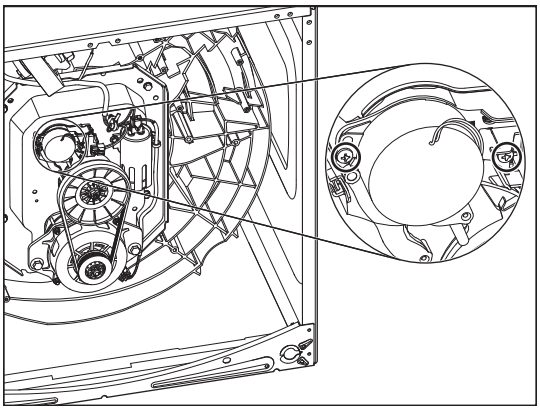

7. Lift out the shifter.

Removing the Drain Pump (Belt-Driven Models)

WARNING

Electrical Shock Hazard

Disconnect power before servicing.

Replace all parts and panels before operating.

Failure to do so can result in death or electrical shock.

WARNING

Excessive Weight Hazard

Use two or more people to move and install washer.

Failure to do so can result in back or other injury.

1. Unplug washer or disconnect power.
2. Turn off the water supply to the washer.
3. Use cardboard or padding to lay washer on the front cabinet.
4. Disconnect hoses to drain pump.

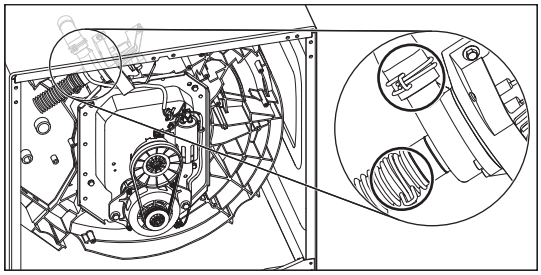

5. Remove the harness from the pump motor.

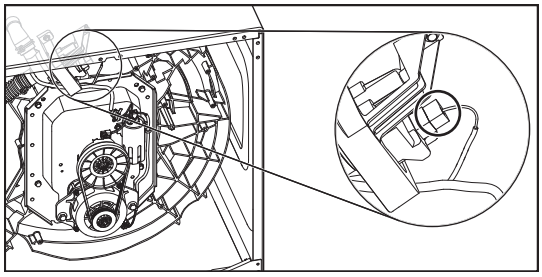

6. Remove three (3) mounting screws.

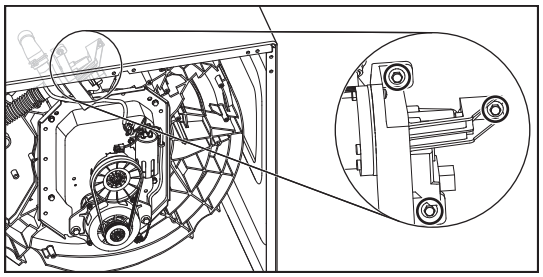

7. Remove pump assembly by lifting up and away from the tub.

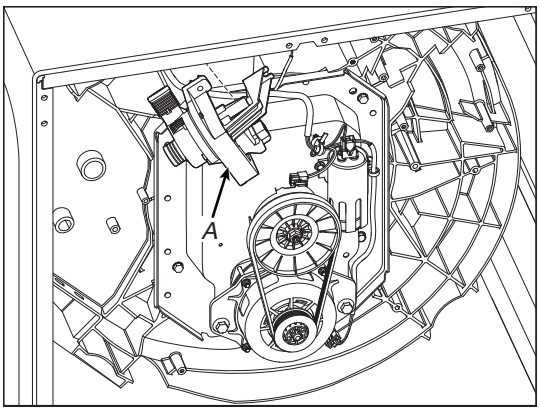

A. Drain Pump

Removing the Drive Belt and Motor (Belt-Driven Models)

⚠ WARNING

Electrical Shock Hazard

Disconnect power before servicing.

Replace all parts and panels before operating.

Failure to do so can result in death or electrical shock.

⚠ WARNING

Excessive Weight Hazard

Use two or more people to move and install washer.

Failure to do so can result in back or other injury.

1. Unplug washer or disconnect power.
2. Turn off the water supply to the washer.
3. Use cardboard or padding to lay washer on the front cabinet.
4. Remove the two (2) mounting screws followed by pulley cover.

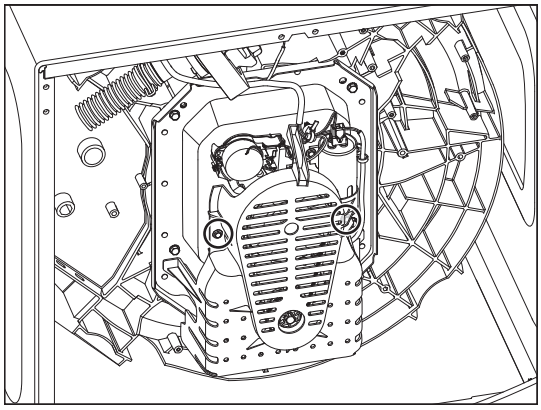

5. To remove the belt, pull out on the belt and turn the splutch pulley until the belt slides off.

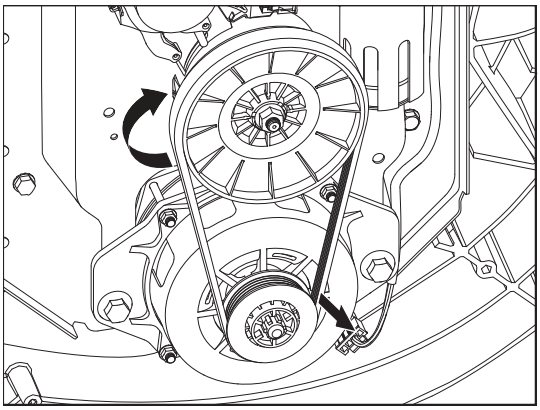

6. Unplug the harness and remove the two (2) mounting bolts. Now you can remove the motor.

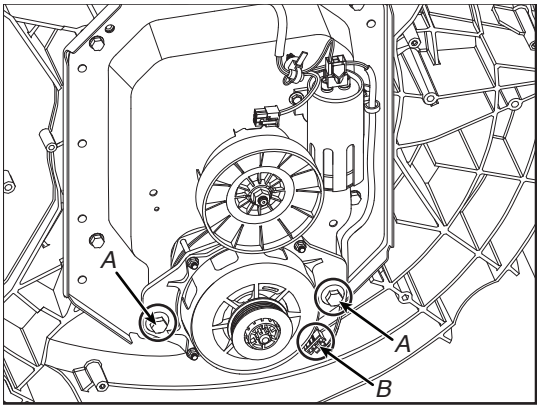

A.Motor Screws B.Motor Harness (Lower)

Removing the Splutch (Belt-Driven Models)

⚠ WARNING

Electrical Shock Hazard

Disconnect power before servicing.

Replace all parts and panels before operating.

Failure to do so can result in death or electrical shock.

⚠ WARNING

Excessive Weight Hazard

Use two or more people to move and install washer.

Failure to do so can result in back or other injury.

1. Unplug washer or disconnect power.
2. Turn off the water supply to the washer.
3. Complete the steps 1-6 from section Removing the Drive Belt and Motor (Belt-Driven Models).
4. Hold the splutch pulley and remove the mounting nut.

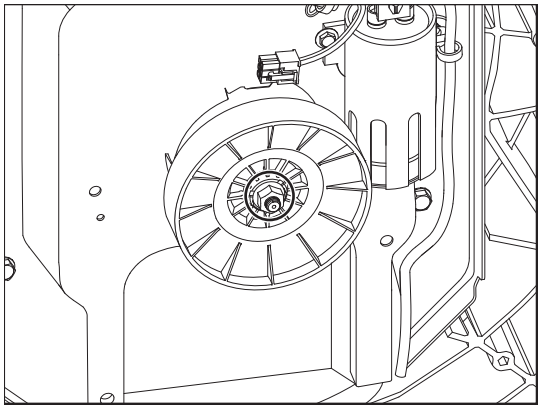

5. Lift off the pulley.

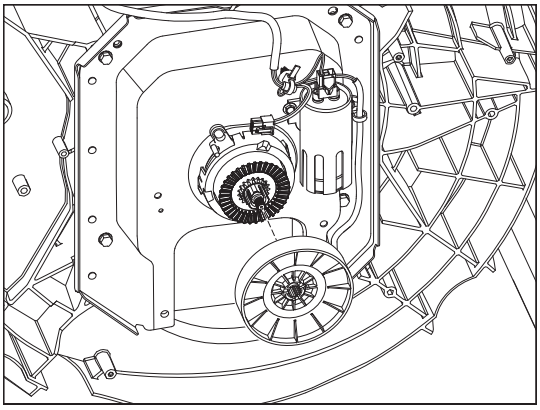

6. Complete the steps 1-7 from section Removing the Shifter (Belt-Driven Models) to remove the shifter.
7. Unsnap the tabs that secure the splutch housing and lift off.

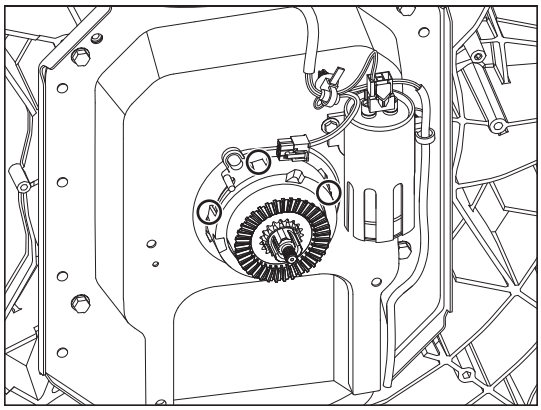

Removing the Gearcase (Belt-Driven Models)

WARNING

Electrical Shock Hazard

Disconnect power before servicing.

Replace all parts and panels before operating.

Failure to do so can result in death or electrical shock.

WARNING

Excessive Weight Hazard

Use two or more people to move and install washer.

Failure to do so can result in back or other injury.

1. Unplug washer or disconnect power.
2. Turn off the water supply to the washer.
3. Complete the steps 1-2 from section Removing the Impeller.
4. Complete the steps 1-2 from section Removing the Basket.
5. Use cardboard or padding to lay washer on the front cabinet.
6. Complete the steps 1-6 from section Removing the Drive Belt and Motor (Belt-Driven Models).
7. Complete the steps from 1-7 Removing the Splutch (Belt-Driven Models).
8. Complete the steps 1-7 from section Removing the Shifter (Belt-Driven Models).
9. Remove the capacitor by disconnecting harness and removing mounting screws as shown in below figures.

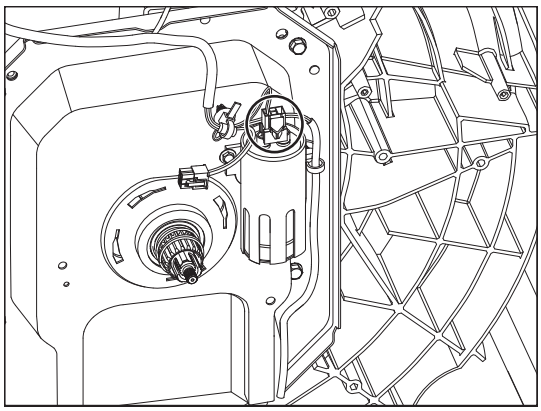

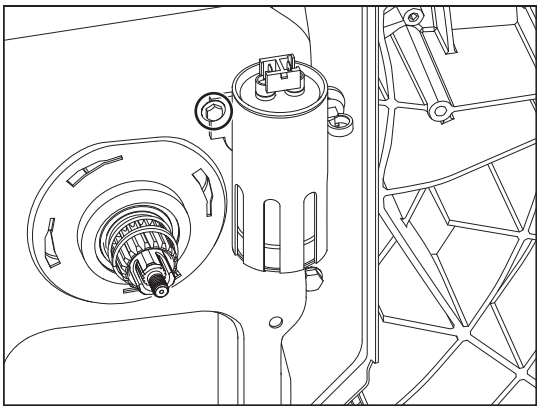

10. Complete the steps 1-7 from section Removing the Drain Pump (Belt-Driven Models).

11. Remove the four (4) mounting bolts.

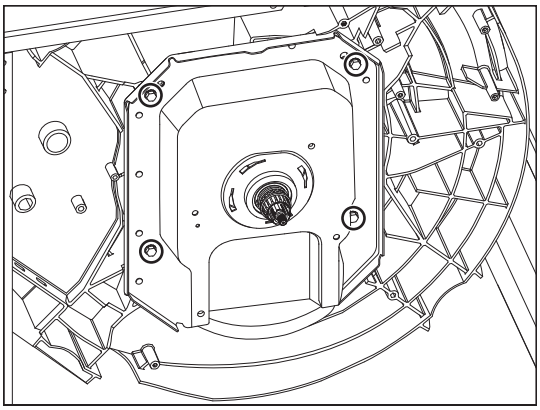

12. Pull the gearcase out of the tub.

As an alternative to the previous steps, the belt, motor, splutch, shifter and capacitor may also be removed along with the gearcase as outlined below:

1. Unplug washer or disconnect power.
2. Turn off the water supply to the washer.
3. Remove the basket. see the section Removing the Impeller and Basket.
4. Use cardboard or padding to lay washer on the front cabinet.
5. Unplug the harness from the motor.

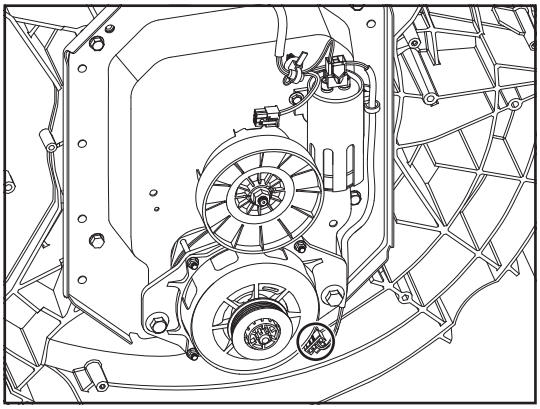

6. Unplug the harness from Shifter.

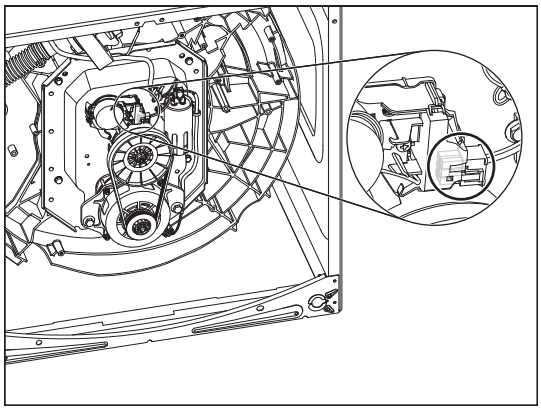

7. Unplug the harness from the capacitor.

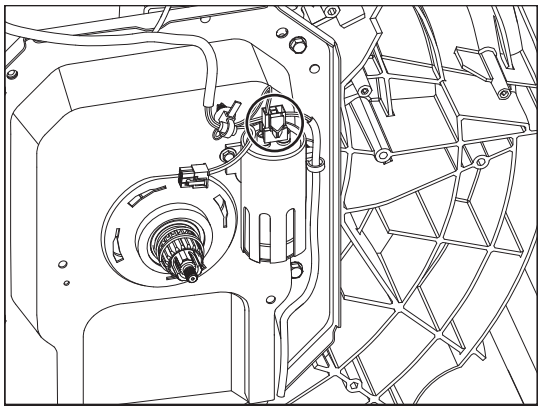

8. Remove the four (4) mounting bolts and pull the gearcase out of the tub.

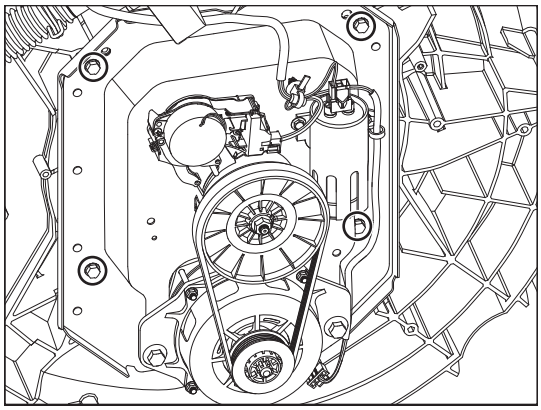

NOTE: The tub and gearcase has eight (8) mounting holes. Only four are used. If they strip out during reassembly, the other holes can be used to re-mount the gearcase.

PRODUCT SPECIFICATIONS & WARRANTY INFORMATION SOURCES

IN THE UNITED STATES:

FOR PRODUCT SPECIFICATIONS AND WARRANTY INFORMATION CALL:

FOR WHIRLPOOL PRODUCTS: 1-800-253-1301

FOR TECHNICAL ASSISTANCE WHILE AT THE CUSTOMER'S HOME CALL:

THE TECHNICAL ASSISTANCE LINE: 1-800-832-7174

HAVE YOUR STORE NUMBER READY TO IDENTIFY YOU AS AN AUTHORIZED IN-HOME SERVICE PROFESSIONAL

FOR LITERATURE ORDERS (CUSTOMER EXPERIENCE CENTER):

PHONE: 1-800-851-4605

FOR TECHNICAL INFORMATION AND SERVICE POINTERS:

www.servicematters.com

IN CANADA:

FOR PRODUCT SPECIFICATIONS AND WARRANTY INFORMATION CALL:

1-800-461-5681

FOR TECHNICAL ASSISTANCE WHILE AT THE CUSTOMER'S HOME CALL:

THE TECHNICAL ASSISTANCE LINE: 1-800-488-4791

HAVE YOUR STORE NUMBER READY TO IDENTIFY YOU AS AN AUTHORIZED IN-HOME SERVICE PROFESSIONAL

Whirlpool® and Maytag® 4.7/5.3 Cubic Foot Top Load Washer

W11416787B